FOX WS2-SERIES

AIR FILTRATION SYSTEMS

OIL MIST COLLECTORS FROM 500 TO 2000 M³/H
FOR THE ELIMINATION OF:

- Oil and emulsion mist
- Vapor
- Smoke

YOUR ADVANTAGES:

- High filtration efficiency (85 % @ 1 µm – ISO 16980)
- Long life-time of the filters
- Integration to the machine-tool
- Control panel for quick and easy monitoring
- Very low cost of ownership
- Wide range of accessories and options, including HEPA filter until H13 (99,95 % @ 0,3 µm efficiency – ISO EN 1822)

YOUR ONE-STOP-SHOP
FOR MACHINE-TOOL PERIPHERALS

Technical specifications		WS2 500*	WS2 1000	WS2 1500	WS2 2000
		50 Hz	50 Hz	50 Hz	50 Hz
Air flow	[m³/h]	470	950	1450	1800
Static pressure	[Pa]	610	950	1260	1720
Motor	[kW]	0.37	0.75**	1.5**	2.2**
Weight	[kg]	43	65	92	110
Sound level	[dB(A)]	65	71	74	76

*Also available in vertical aspiration.
**«IE3»

All units painted in RAL 7035/7016 (special colors available upon request)

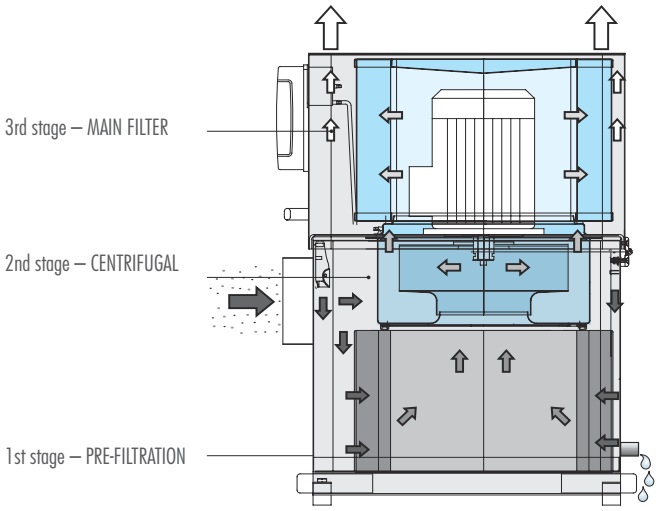

GARANTEED FILTRATION

1st STAGE – PRE-FILTRATION: A special cartridge, composed of 3 different stages with progressive filtration levels. Its main characteristics are the high capability of accumulating particles and the slow and efficient draining effect.
2nd STAGE – CENTRIFUGAL: A special impeller ensures the centrifugal effect that enables the continuous discharge of recondensed particles.
3rd STAGE – MAIN FILTER: Made of fibreglass, provides an average efficiency level up to ISO ePM1 85% according to ISO 16890. Clogging is monitored by a pressure gauge that clearly indicates when the cartridge must be replaced.

Dimensions (mm)	A	B	C	D	E	ø F	ø G	H	I	L	HEPA	N1 x N2 x ø M
WS2 500	408	515	652	460	276	124	25	67	450	120	200	363 x 395 x 9
WS2 1000	525	600	801	543	362	149	25	60	567	135	220	478 x 478 x 9
WS2 1500	600	673	908	617	396	198	25	59	640	176	220	552 x 552 x 9
WS2 2000	663	737	994	680	437	198	25	59	703	181	220	615 x 615 x 9

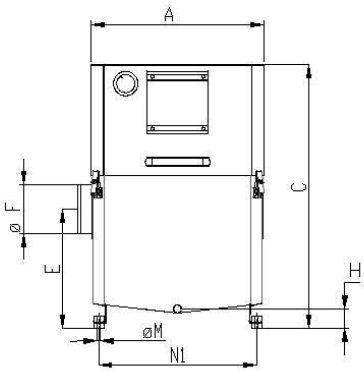

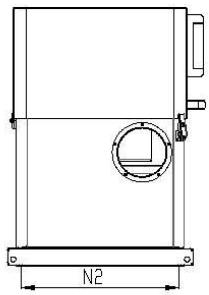

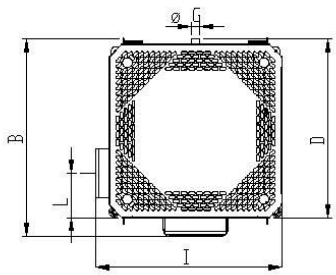

Patented system

SERVICES

LNS Fox's entry in the market is not limited to the supply of filtration units but, upon request, to a complete consulting service related to the evaluation of the air quality in the workplace.
With the support of internal qualified personnel we can perform an analysis of pollutants concentration level and in conjunction with a certified external lab we submit a complete report of evaluation.

EASY MAINTENANCE

Maintenance requires less than ten minutes (complete replacement of filters). The result is a considerable saving in time and costs across the life of the unit.
The reliability is guaranteed due to the special impeller and to the high quality of the components, each thoroughly selected and tested. See instruction manual for full procedure.

While a main advantage is to change the filters idenpendently, the pictures show how to change a full set of filter.

In order to change a filter set, you need to start from the top and finish with the bottom:
1 – HEPA filter
2 – Main filter
3 – Pre-filter

For the remantling of the unit, you need to reverse the steps:
1 – Pre-filter
2 – Main filter
3 – HEPA filter

OIL MIST COLLECTORS

The Fox WS2-Series represents a quality solution for the collection of soluble coolant and oil mist.
It is characterized by a sophisticated design, compact dimensions, standard and customizable accessories, and 4 sizes ranging from 500 to 2000 m^3/h. Specifically developed for the elimination of mist and smoke typical of coolant machining operations these mechanical filters can also be employed for EDM machines.

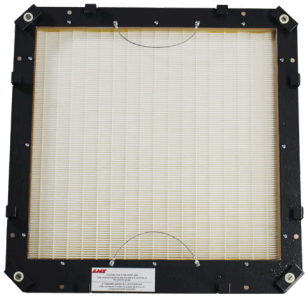

ADDITIONAL FILTRATION STAGE

For special and severe applications there is the possibility to install an additional filtration module that fits perfeclty on the unit. The addition is simple and can be done even later with a special kit.

YOUR ADVANTAGES

- Very Low Total Cost of Ownership
- Help reducing cleaning cost in the factory and improves security at work
- Round filter shape makes WS2 compacts and easy to install on a machine
- The WS2 suits for different type of coolant and different type of applications
- Intended use for high mist concentration application (high pressure coolant, live tools, high frequency spindles…)

ABSOLUTE FILTRATION

A module of final filtration H13 will eliminate dry smoke typical of certain applications where heat oil is used. The efficiency level guaranteed is 99,95 % @ 0,3 µm efficiency – ISO EN 1822). Its clogging can be monitored with a standard pressure gauge.

Filter replacement alarm signal

Gauge to monitor filter efficiency

Additional controls and monitoring systems

Fittings and ducting

Trolley

ACCESSORIES FOR INSTALLATION

The Fox WS2-Series, has a complete line of dedicated accessories for installation on the machine tools.

Deflector

90° waterproof connection for mounting on the FOX or on the machine

Waterproof connection for mounting on the machine

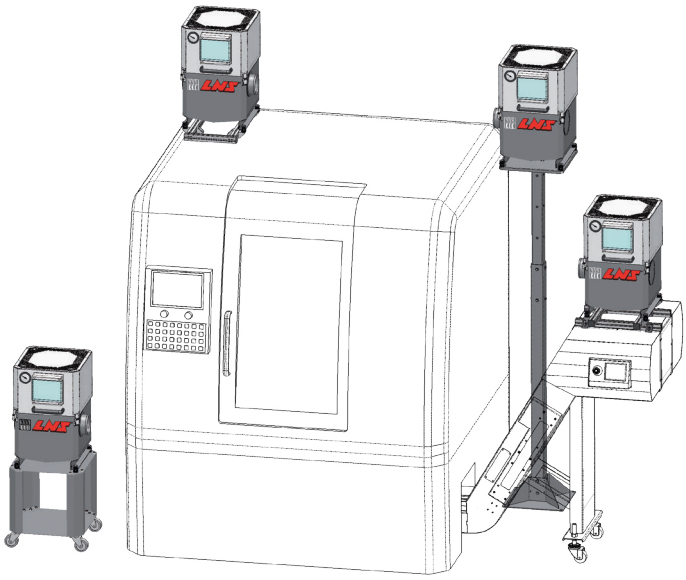

POSSIBILITIES OF INSTALLATION

The FOX WS2 can be fitted to the machine-tool in 4 different ways:

1. On an aluminum frame on top of the machine
2. On a trolley
3. On a vertical stand
4. On a conveyor

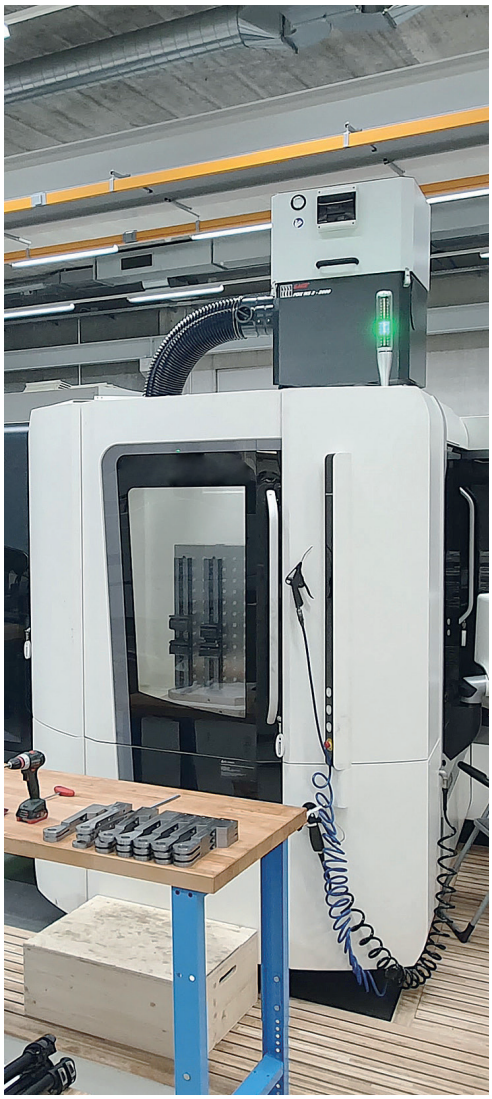

MEASURING AIR QUALITY

The value to characterize good air quality in production workshops in Europe should not exceed 0.5 mg/m³ for PM10.
This is the reason why we are equipped with real-time aerosol mass and size fraction measurement from TSI Inc.
In LNS we strongly believe that data helps us every day to achieve our objectives.
We support organizations promoting well-being to their employees to determine the performance of their installation.

NOTES

YOUR ONE-STOP-SHOP FOR MACHINE-TOOL PERIPHERALS

LNS provides a full range of bar feeders, chip conveyors, coolant management systems and air filtration systems which is second to none on the market. We are known in the industry for the solid expertise we have gained over several decades in an exceptionally wide range of applications, our excellent customer service and technical support. This support is ensured by highly qualified technicians who are available at key locations throughout Europe.

Van der Ende Group
Aartsdijkweg 23
2676 LE Maasdijk
the Netherlands

Dealer Benelux
+31 174 51 50 50
sales.moor@vanderendegroup.com
www.vanderendegroup.com

LNS Europe
Route de Frinvillier
2534 Orvin
Switzerland

+41 32 358 02 00
LNS@LNS-europe.com
www.LNS-europe.com

Subject to modifications / FOX WS2 – EN/ 02.2023