MANUAL

Airmix model T

Controlled ventilation/circulation system



Version: 2026-10

FOREWORD

This guide is intended for users of the Airmix model T and technicians who install and maintain it. The manual and operating instructions are bundled together in a single document. This manual has been written by the inventor of the Airmix, who will be later referred to as VDEG.

Each chapter is numbered and, where necessary, divided into sections. The table of contents on page 3 contains an overview of the chapters and paragraphs, with references to page numbers.

Van der Ende Group · Aartsdijkweg 23, 2676 LE Maasdijk, The Netherlands
+31 174 51 50 50 · info@vanderendegroup.com · www.vanderendegroup.com

CONTENTS

Foreword 1
CONTENTS 3
1 Identification 4
1.1 General 4
1.1.1 Description of the device 4
1.1.2 Specifications 4
1.1.3 Diagram of the system 5
1.2 Users 6
1.3 Use 6
1.4 Authorized servicers 6
1.5 Operating environment 6
1.6 Guarantee conditions 6
1.7 Relevant directives 6
2 Description 7
2.1 General 7
2.2 Transportation and Storage 7
3 Safety instructions 8
4 Installation 9
4.1 Contents of the installation kit 9
4.2 Suspending the Airmix 11
4.2.1 Mounting directly under the truss lattice 11
4.2.2 Mounting with the extended suspension bracket set 12
4.3 Attaching the fan and condensation collector 13
4.4 Installing the extension 16
4.5 Installing the spacer 17
4.6 Installing the valve position sensor 19
4.7 Air flow guide plates 21
4.7.1 Configuration of the air flow guide plates 21
4.7.2 Assembling the air flow guide plates 22
4.8 Modifying the screen cloth 24
4.8.1 prescribed modification to the screen cloth 24
4.8.2 Protecting the screen support wires 24
5 Connecting the thermostatic switch 26
6 Operation/using for the first time 27
6.1 Connection diagram fan 27
6.1.1 Connection diagram ZN045 AC fan 230 V ~1 50 Hz 27
6.1.2 Connection diagram ZN045 AC fan 230/400V D/Y ~3 50 Hz 27
6.1.3 Connection diagram ZN045 EC-fan 200-277 V AC ~1 50/60 Hz 28
6.1.4 Connection diagram ZG045 EC-fan 200-240 V AC ~1 50/60 Hz 29
6.2 Valve actuator 30
6.3 Connection diagram valve position sensor 30
7 Maintenance 31
8 Failures and repairs 31
9 Disassembly 31
Declaration of Conformity 32
EU Declaration of Conformity 33
Attachments 34
CE declaration concerning fan 35
CE declaration concerning valve actuator 36
UKCA declaration concerning fan 37
UKCA declaration concerning valve actuator 38

Van der Ende Group · Aartsdijkweg 23, 2676 LE Maasdijk, The Netherlands
+31 174 51 50 50 · info@vanderendegroup.com · www.vanderendegroup.com

1 IDENTIFICATION

This overview contains general information about the device. The purpose of this part is to indicate the limits and overall operation of the device, and the areas it is used in.

1.1 General

1.1.1 Description of the device

The Airmix consists of a fan attached to an aluminum housing, which is open at the top and fitted with two valves at the rear. These valves are controlled by a gear-rack drive. The Airmix is equipped with a power cable with a plug for the fan, and a power cable for the valve actuator. The Airmix has no internal controls.

1.1.2 Specifications

General				
Type	Airmix model T			
Max. dimensions lxwxh	777 x 700 x 998 mm			
Total mass	32 kg			
Fan				
	ZN045 ZAplus	ZG045	ZG045	ZN045***
Frequency	50 Hz AC	50/60 Hz EC	50/60 Hz EC	50 / 60 Hz AC
Power	0,38 kW	0,17 kW	0,36 kW	0,24 kW
Voltage	230 V ~1 of 400 V ~3	200-240 V ~1	200-277 V ~1	230 V ~1
Rotation speed	1250 rpm	1230 rpm	1370 rpm**	960 rpm
Current	1,7 A ~1 of 0,64 ~3	1,8 – 1,5 A	1,85 – 1,3 A	1,05 A
Circulation capacity	5900 m^3/h*	5600 m^3/h*	6100 m^3/h**	5200 m^3/h*
Ventilation capacity	5300 m^3/h*	4400 m^3/h*	5700 m^3/h**	4200 m^3/h*
Dust and water ingress protection	IP54			
Insulation class	THCL155			
Power cable	Optional	Optional	Optional	Optional
Signal cable fan	-	Optional	Optional	-
Certification	CE-mark, EAC	CE-mark, EAC, cURus (E347018 ZB-155)	CE-mark, EAC, cURus (E347018 ZB-155)	EAC, cURus (E111399 ZA-155)
Valve actuator				
Power	1.5 W			
Voltage	24 V AC 50/60 Hz. 24 V DC			
Functional range	AC/DC 19.2 .. 28.8 V			
Duration	116 sec			
Dust and water ingress protection	IP54			
Adjustment force	150 N			
Power cable	5 m flexible cable 3 x 0.75 mm^2 without plug			
Certification	CE-mark, cULus (E108966), UKCA			
Housing				
Material	Aluminum 3 mm			
Number of valves	Model T: 2 pc.			

Table 1 Specifications

Van der Ende Group · Aartsdijkweg 23, 2676 LE Maasdijk, The Netherlands
+31 174 51 50 50 · info@vanderendegroup.com · www.vanderendegroup.com

* Measured without air guide plate and grille, and depending on pressure difference.
** The EC fan has a nominal rotational speed of 1470 rpm. This fan needs a starting signal and needs to be set to a specific rotational velocity. A rotational speed of 1250 rpm gives a ventilation capacity of 5200 m^3/hour. The installation drawings and calculations are based on this rotational speed and ventilation capacity as standard. The EC fan is a fan with internal control. The EC fan is supplied as standard on the basis of factory settings and non-addressed.
*** Not available for the European market

1.1.3 Diagram of the system

Diagram showing the main components, numbered and named.

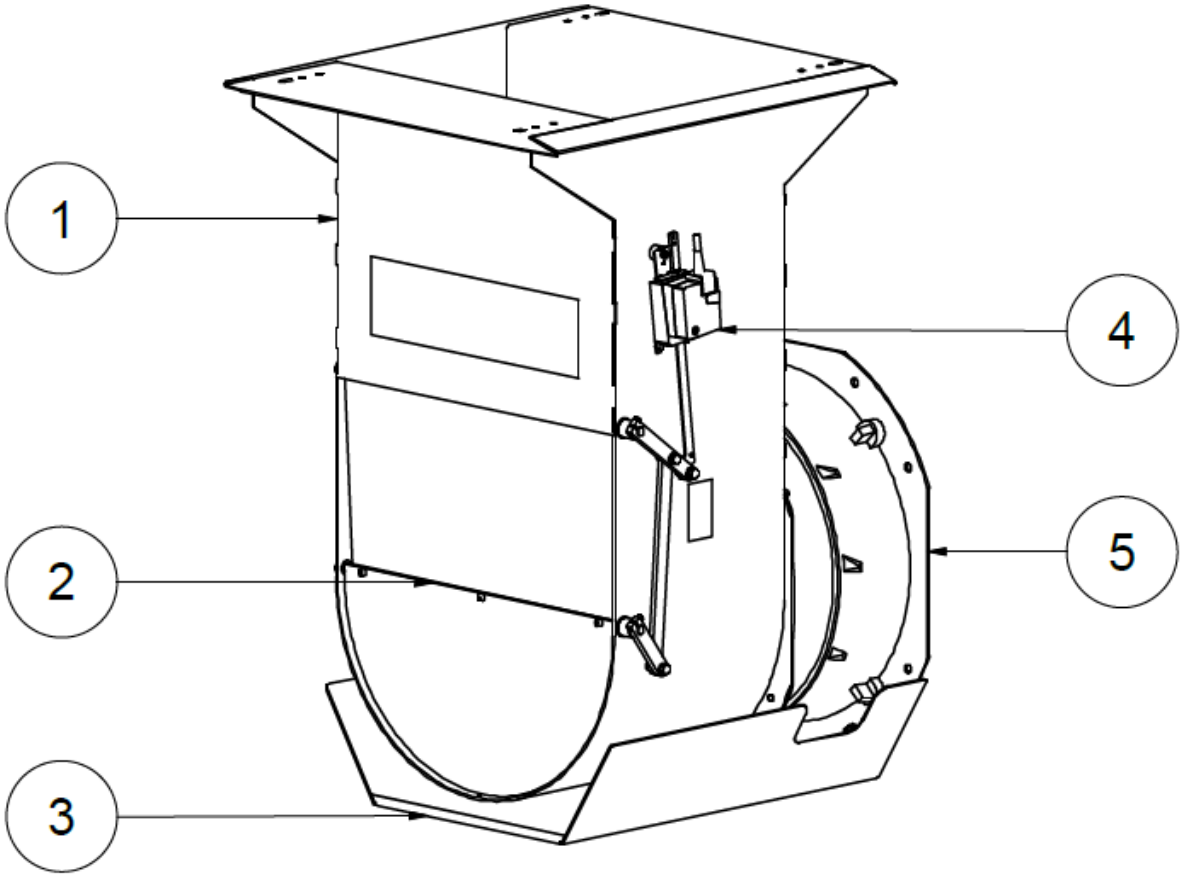

Figure 1 Schematic view with main components

No.	Designation
1	Airmix housing
2	Valves
3	Condensation collector
4	Valve actuator
5	Ventilator

Van der Ende Group · Aartsdijkweg 23, 2676 LE Maasdijk, The Netherlands
+31 174 51 50 50 · info@vanderendegroup.com · www.vanderendegroup.com

1.2 Users

Generally, the Airmix is not operated directly, but controlled by an operator or user via a control box. These users or operators must be at least 18 years old, employed by the company where the Airmix is installed, and designated by the management as competent and authorized to operate the Airmix. All those who do not meet the above definition are unauthorized users, such users can cause a hazardous environment, endangering their own safety, as well as others.

1.3 Use

The Airmix is intended to mix hot humid air from cultivation areas with cool dry air from above the screen cloth in a greenhouse in order to improve the climate distribution in a greenhouse as well as create a horizontal air circulation. The Airmix is not intended to be used for any other purposes than those described above, e.g. transporting gases other than low-temperature air (-10 °C to + 50 °C).

1.4 Authorized servicers

The Airmix can be serviced by any maintenance company, but Van der Ende is recommended as this company is familiar with every aspect of the device.
Periodic servicing helps avoid unnecessary costs or failures, and improves reliability.

1.5 Operating environment

Install the Airmix on the lowest bar of the truss lattice. Make a hole in the screen cloth, and connect this with the opening at the top of the aluminum housing. If the screen cloth is attached to the upper bar of the truss lattice, use an extension to overcome the height difference. If the greenhouse has a double screen cloth, install a spacer between the two screen cloths, then connect this to the Airmix housing.
The fan must be installed out of reach of those without special equipment, and the truss must be strong enough to bear the weight of the fan.
The Airmix is not intended to be used in any other environment than that described above. The Airmix is not suitable for use in explosive environments.

1.6 Guarantee conditions

The unit is guaranteed for 6 months after first use.
If a claim is made under guarantee, the parts concerned must be presented to the manufacturer for assessment.
The guarantee is void in the event of any of the following;

- Improper use
- Repeatedly ignoring the manufacturer’s or supplier’s advice
- Unauthorized repair, maintenance or use
- Use of inappropriate power supply connections
- Use of the machine in an unsuitable environment
- Intentional damage or modification to the machine

1.7 Relevant directives

The Airmix complies with the provisions in the directives which can be found in the attachments.

The Airmix is classified as a Class I device according to the Low Voltage Directive.

Van der Ende Group · Aartsdijkweg 23, 2676 LE Maasdijk, The Netherlands
+31 174 51 50 50 · info@vanderendegroup.com · www.vanderendegroup.com

2 DESCRIPTION

2.1 General

The purpose of the Airmix™ is to ventilate and dehumidify an area with a closed screen cloth. The Airmix sucks in air from above the screen, and blows it into the cultivation area below. The system serves multiple functions, as it also acts as a horizontal recirculation system. This method of operation allows ventilation to be controlled, and the screen cloth to be kept closed for a longer period of time. The advantage of this operation method is that it is unnecessary to create a 'slit' in the screen when it is cold outside, thereby preventing pockets of cold (unwanted air flows and temperature differences).

The Airmix is fitted with a ZN045 fan, which is the same fan that is used in the Enfan™. The inlet side of this fan is attached to the aluminum housing. Two valves are mounted in the housing, so air can be sucked in from both above and below the screen cloth, depending on their position (see Figure 2). When the valves are closed, the Airmix sucks in air from the cultivation area, and acts as a horizontal recirculation system. If the valves are open, air is sucked in from above the screen cloth. The Airmix can be used in greenhouses with either single-screen- or double-screen systems.
Since the valves are controlled by the climate computer, the correct proportion of air from above and below the screen cloth can be obtained from the valve's position. The control parameters which the climate computer uses to determine the correct valve position are relative humidity and temperature.

The Airmix can be used to improve the cultivation of multiple fruits, vegetables and floricultural product.



Figure 2 Overview of valve positions (from left to right: open/halfway/closed)

2.2 Transportation and Storage

The Airmix is delivered in two parts. It is only necessary to attach the fan to the aluminum housing. All parts named in chapter 4.1. will be delivered to the customer separately.

Van der Ende Group · Aartsdijkweg 23, 2676 LE Maasdijk, The Netherlands
+31 174 51 50 50 · info@vanderendegroup.com · www.vanderendegroup.com

3 SAFETY INSTRUCTIONS

Always make sure that the plug of the Airmix is disconnected from the power supply before working on it! This prevents the fan starting unexpectedly or unintentionally.

Do not connect the fan or the gear-rack drive to the power supply until assembly has been completed and the system has been suspended.

Only use self-locking nuts to assemble and mount the Airmix! Failure to do so may result in parts vibrating loose and falling off.

The regulations below are applicable to the Airmix model T.

Safety symbol	Description
	Automatic starting machine!
	Electric voltage present!
	Danger of falling!
	Rotating parts!
	Remove power plug before working on the system!
	Reading instructions obligated!

Van der Ende Group · Aartsdijkweg 23, 2676 LE Maasdijk, The Netherlands
+31 174 51 50 50 · info@vanderendegroup.com · www.vanderendegroup.com

4 INSTALLATION

This chapter describes the procedures in order to correctly install and use the Airmix. The fan still has to be attached to the aluminum housing. There is also an explanation on how to install the spacer and the extension piece. Read the entire manual before starting work.

4.1 Contents of the installation kit

Quantity	Description	Type
Airmix model T		
1 pcs.	Airmix (excluding fan)	Incl. valve actuator 24 V AC 50/60 Hz. 24 V DC, 1.5 W operating range AC/DC 19.2 to 28.8 V duration 116 s IP54 torque 150 N 5-m 3 x 0.75 mm² cable without plug
1 pcs.	Fan	ZN045 AC or EC
1 pcs.	Power supply cable	At 50Hz 230Vac: 5-m flexible cable plus Type F earthed plug Additionally: Without cable
8 pcs.	Attachment material of fan to Aluminum housing	Lock nut and washer stainless steel M10
1 pcs.	Attachment of Airmix to truss lattice	2 M8 U-clamps U50x50 or U60x55 4 M8 fender washers 4 M8 hexagonal lock nuts
2 pcs.	3-mm padding strip	Aluminum strip 50x60x3mm
1 pcs.	Condensation collector	Condensation collector incl. 2x hexagonal bolt m10x25 2x hexagonal nut m10 2x washer m10
Extension		
1 pcs.	Extension	Customer-specific component. The length of the extension depends on the height which has to be bridged.
Spacer		
1 pcs.	Spacer	Customer-specific component. The length of the spacer depends on the gap between the two screen cloths.
1 pcs.	Attachment of the spacer to the truss lattice	2x M8 U-clamps U50x50 or U60x55 4x M8 fender washers 4x M8 hexagonal lock nuts
2 pcs.	Padding strip 3 mm	Aluminum strip 50x60x3mm
1 pcs.	cuff	1x cuff 10x self-tapping metal screws 2x clamping strips 2x stainless steel shafts L=540mm d=4 mm

Van der Ende Group · Aartsdijkweg 23, 2676 LE Maasdijk, The Netherlands
+31 174 51 50 50 · info@vanderendegroup.com · www.vanderendegroup.com

Optionally		
1 pcs.	Valve position sensor	60^0/1 KΩ incl. 2x M5 washers 2x M5 lock nuts
1 pcs.	Connection of the valve position sensor to the valve actuator (gear-rack drive)	2x Clamp incl. 1x M4x16 hexagonal bolt stainless steel 1x M5x20 hexagonal bolt stainless steel 1x M5x20 internal hexagonal countersunk bolt stainless steel 2x M5 hexagonal lock nut stainless steel 4x M5 fender washer stainless steel 1x M4 hexagonal lock nut stainless steel 3x M4 fender washer stainless steel
1 pcs.	Extended suspension bracket set	2x extended suspension bracket incl. 4x M8x25 carriage bolt 4x M8 lock nuts 4x M8 washers
1 pcs.	Air flow guide plate for Enfan/Airmix	Single Configuration: 1x air flow guide plate 3x hexagonal tap bolt m5 x 16 6x washer m5 3x hexagonal locknut m5
1 pcs.	Mounting bracket for Enfan/Airmix	1x mounting bracket 4x hexagonal tap bolt m10 x 25 8 x washer m10 4x hexagonal locknut m10
1 pcs.	Nylon hose	1x roll nylon hose Outer diameter: 10 mm Inner diameter: 8 mm
1 pcs.	Power supply cable	Desirable length
1 pcs.	Signal cable	Desirable length

Table 2 Contents of the installation kit

Van der Ende Group · Aartsdijkweg 23, 2676 LE Maasdijk, The Netherlands
+31 174 51 50 50 · info@vanderendegroup.com · www.vanderendegroup.com

4.2 Suspending the Airmix

4.2.1 Mounting directly under the truss lattice

It is easier to suspend the Airmix before attaching the fan to the aluminum housing, so only attach the fan when the Airmix is already suspended. Proceed as follows:

- Choose a suitable location;
    - Make sure that any shrinkage of the screen cloth can be compensated for by suspending the Airmix in such a way that it can be shifted towards the centre of the screen cloth if necessary. The degree of shrinkage varies according to the type and age of cloth, but can reach 15 cm per 100 meters of screen cloth;
    - Make sure that no objects can obstruct the Airmix inlets;
    - The fan must be kept out of reach to those without special equipment, such as a stepladder.
    - Check that the truss lattice is in good condition;
    - Check if there is a socket less than 5 m away;
    - make sure the Airmix is attached to the correct side of the truss lattice. The Airmix must be attached to the side of the truss lattice towards which the screen cloth profile moves when closing;
    - Make sure that the Airmix is mounted underneath two screen support wires. This is ensure that the aluminum screen profile runs over the housing;
    - Place 2 extra support wires next to the Airmix, these wires support the screen cloth.
    - Remove the two guiding clips from the screen cloth profile at the Airmix. These clips will not be able to slide over the Airmix and could potentially cause damage.
- Use proper tools and equipment;
- Make sure that the Airmix can be installed safely - get help if necessary;
- Requirements;
    - 2x M8 U-clamps U50x50 or U60x55;
    - 4x M8 fender washers;
    - 4x M8 lock nuts;
    - 2x padding strip (50x60x3mm);
- Assembly (see Figure 3);
    - Bring the Airmix to the place reserved for it;
    - Attach the Airmix to the lower bar of the truss lattice (4) with two clamps (1), four M8 fender washers (2) and four M8 lock nuts (3);
    - Use the padding strip (5) between the truss lattice bar and Airmix housing to create an opening of 3mm for the screen support wires;

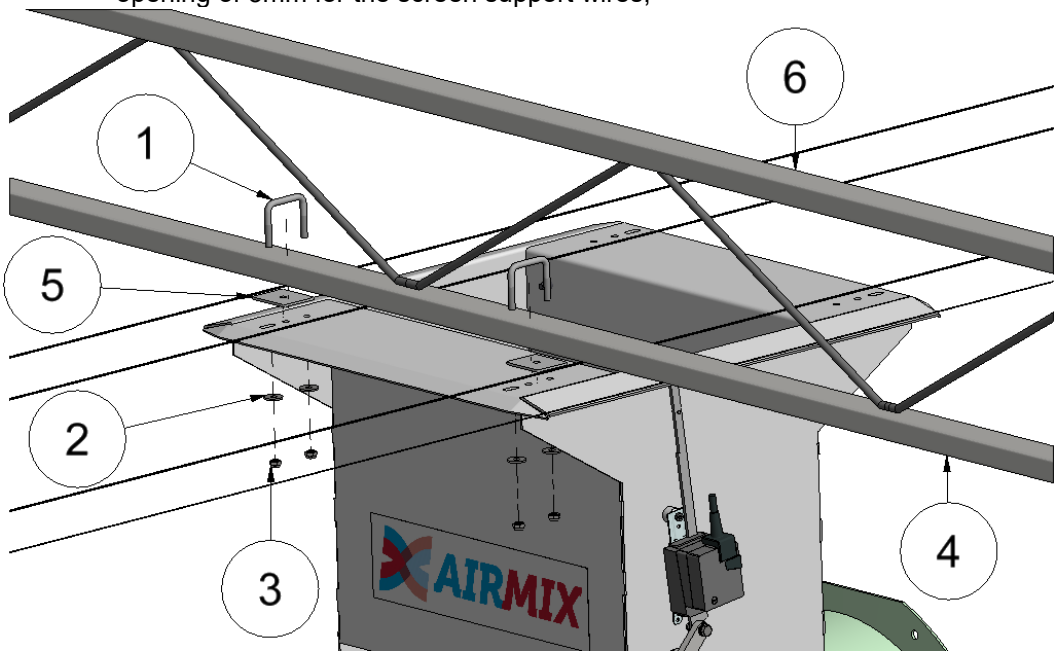

Figure 3 Attaching the Airmix to the truss lattice

Van der Ende Group · Aartsdijkweg 23, 2676 LE Maasdijk, The Netherlands
+31 174 51 50 50 · info@vanderendegroup.com · www.vanderendegroup.com

4.2.2 Mounting with the extended suspension bracket set

The extended suspension bracket set can be used when one has reasons to not directly attach the Airmix to the truss lattice. It is easier to suspend the Airmix in combination with the extended suspension bracket set when the fan is already mounted to the aluminum housing. See chapter 4.3 “attaching the fan” for more information. When the fan is mounded to the Airmix housing proceed as follows:

- Choose a suitable location;
    - Make sure that any shrinkage of the screen cloth can be compensated by suspending the Airmix in such a way that it can be shifted if necessary towards the centre of the screen cloth. The degree of shrinkage varies according to the type and age of cloth, but can reach 15 cm per 100 meters of screen cloth;
    - Make sure that no objects can obstruct the Airmix inlets;
    - The fan must be kept of reach unless special equipment, such as a stepladder, is used.
    - Check that the truss is in good condition;
    - Check if there is a socket less than 5 m away;
    - Make sure the Airmix is attached to the correct side of the truss lattice. The Airmix must be attached to the side of the truss lattice towards which the screen cloth profile moves when it closes;
- Use proper tools and equipment;
- Make sure that the Airmix can be installed safely - get help if necessary;
- What you will need:
    - 2x extended suspension bracket;
    - 2x M8 U-clamps U50x50 or U60x55;
    - 4x M8x25 Carriage bolt
    - 8x M8 fender washers;
    - 8x M8 lock nuts;
- Assembly (see Figure 4);
    - The holes, in the Airmix housing, for the carriage bolts (2) need to be drilled to Ø11mm;
    - Attach the two extended suspension brackets (3) with four carriage bolts (2), four M8 fender washers (4) and four M8 lock nuts (5) to the Airmix;
    - Bring the Airmix to the place reserved for it; If this position is the upper bar of the truss lattice, one has to take into account a maximum truss lattice height of 500 mm.
    - Attach the Airmix with the extended suspension brackets (3) to the truss lattice (6) with two clamps (1), four M8 fender washers (4) and four M8 lock nuts (5);

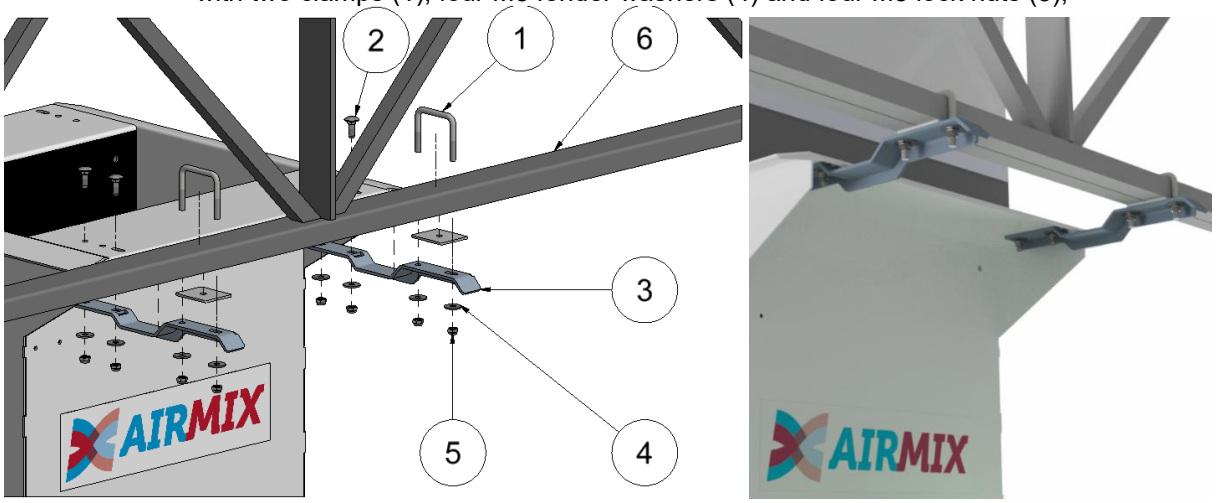

Figure 4 mounting the Airmix by means of the extended suspension bracket set

Van der Ende Group · Aartsdijkweg 23, 2676 LE Maasdijk, The Netherlands
+31 174 51 50 50 · info@vanderendegroup.com · www.vanderendegroup.com

4.3 Attaching the fan and condensation collector

After the Airmix housing has been suspended, the fan can be attached to it. It is more easy to connect the power supply cable to the fan, before you attach the fan to the Airmix housing. In order to correctly install the thermal switch follow the instructions in chapter 5. To attach the fan correctly, proceed as follows:

- Use proper tools and equipment;
- Make sure that the Airmix can be installed safely - get help if necessary;
- What you will need:
    - 12x M10 washers;
    - 8x M10 lock nuts;
    - 2x M10 standard nuts;
    - 2x M10x25 bolt;
- Assembly (see Figure 5);
    - Place the fan and condensation collector next to the Airmix;
    - Attach the fan and the condensation collector to the aluminum Airmix housing by Inserting it over the protruding M10 threads. Then secure the fan with the supplied washers (1) and lock nuts (2);
    - You can use the two standard nuts (3) at detail B. At this location it is more difficult to tighten the self-locking nuts because of the condensation collector.
    - Use the M10x25 nuts to connect the condensation collector to the front of the ZN045 fan.

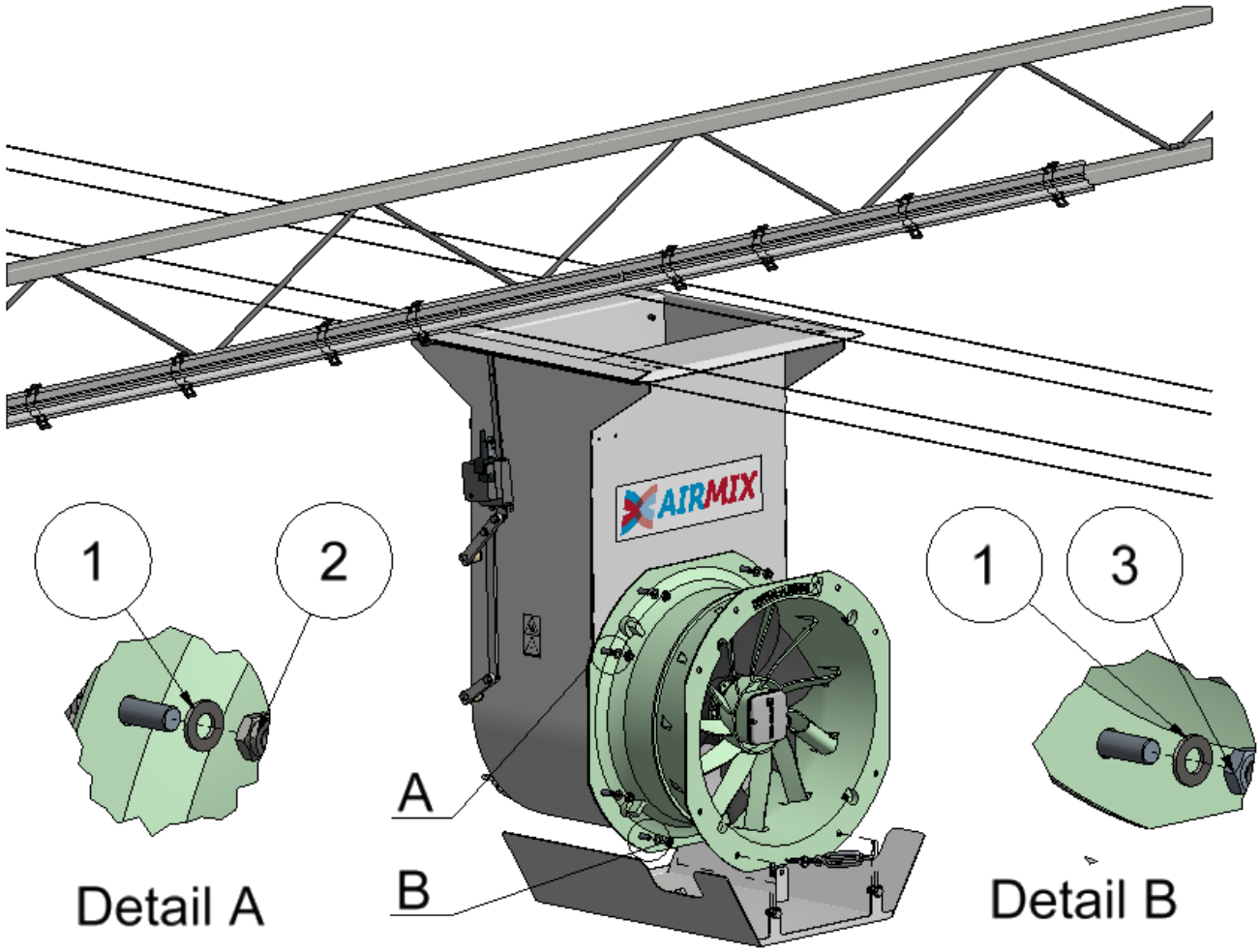

Figure 5 Attaching the fan to the Airmix

Van der Ende Group · Aartsdijkweg 23, 2676 LE Maasdijk, The Netherlands
+31 174 51 50 50 · info@vanderendegroup.com · www.vanderendegroup.com

After the fan is attached to the Airmix, level the Airmix by attaching and tensioning wires to the first or second consecutive truss lattice (see Figure 6). Depending on the strength of the truss lattice it can be decided to either mount one or two wires. The angle of the Airmix needs to be adjusted so that it runs parallel with the screen support wires. The Airmix housing has one hole in its bottom side. A steel wire is looped through it and is fixated by means of a wire clamp. A turnbuckle connects the loop to a wire and tensions it to the truss lattice. If the Airmix needs to tensioned towards the opposite side, two holes need to be drilled in the ZN045 fan housing (see detail D).

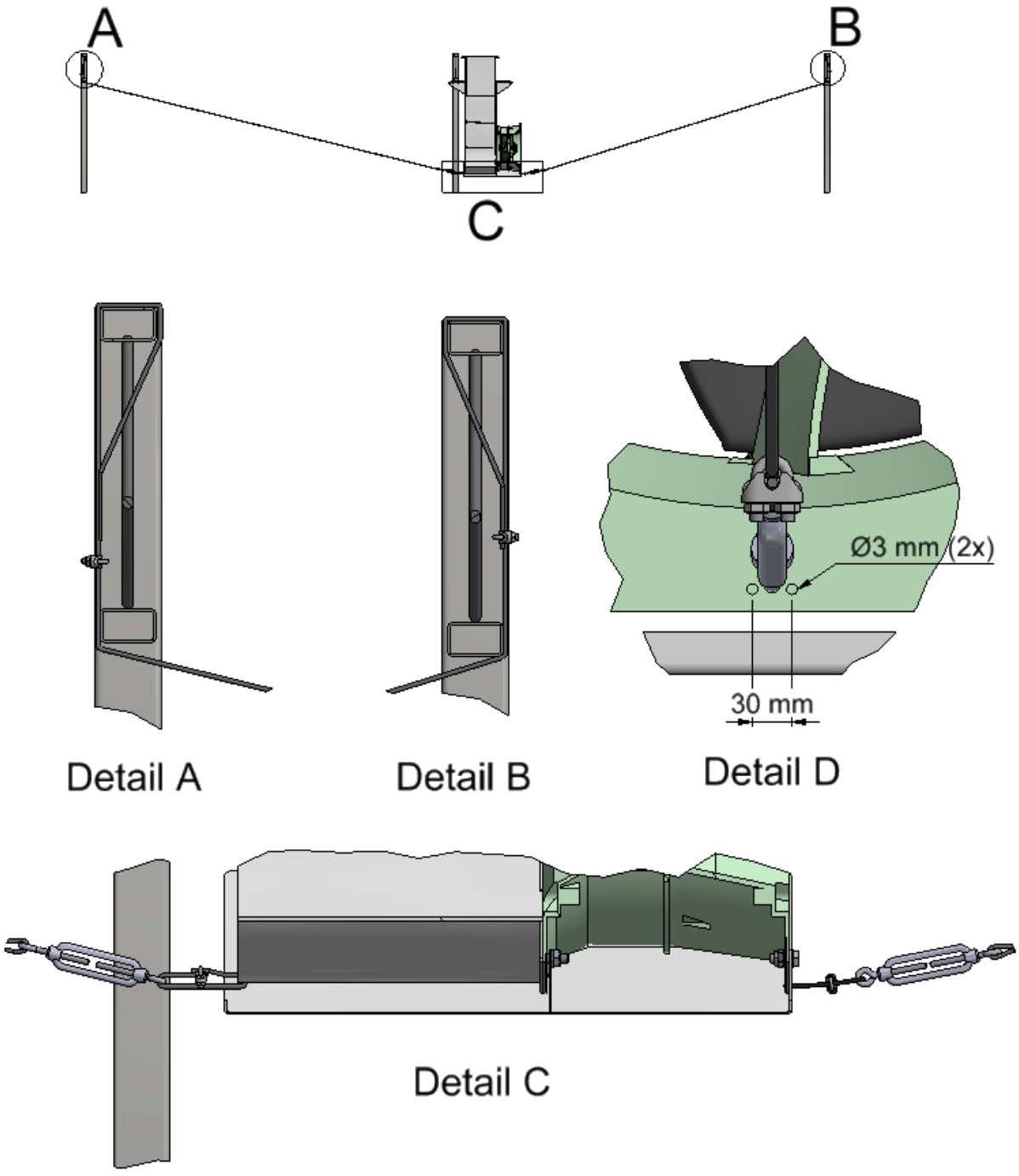

Figure 6 Tightening the Airmix

Van der Ende Group · Aartsdijkweg 23, 2676 LE Maasdijk, The Netherlands
+31 174 51 50 50 · info@vanderendegroup.com · www.vanderendegroup.com



Figure 7 Attaching the turnbuckle to the Airmix housing

Van der Ende Group · Aartsdijkweg 23, 2676 LE Maasdijk, The Netherlands
+31 174 51 50 50 · info@vanderendegroup.com · www.vanderendegroup.com

4.4 Installing the extension

If it is not possible to connect the opening on the top of the Airmix housing directly to the screen cloth, an extension must be installed to bridge the gap. This procedure is described below.

- Use proper tools and equipment;
- Make sure that the extension can be installed safely - get help if necessary;
- Requirements:
    - 4 self-tapping screws;
- Assembly (see Figure 8);
    - Insert the extension (2) into the Airmix housing;
    - Make sure that the extension extends to the screen cloth;
    - Attach the extension to the Airmix housing using four self-tapping screws (3) (two screws in the front and two screws in the rear of the Airmix);

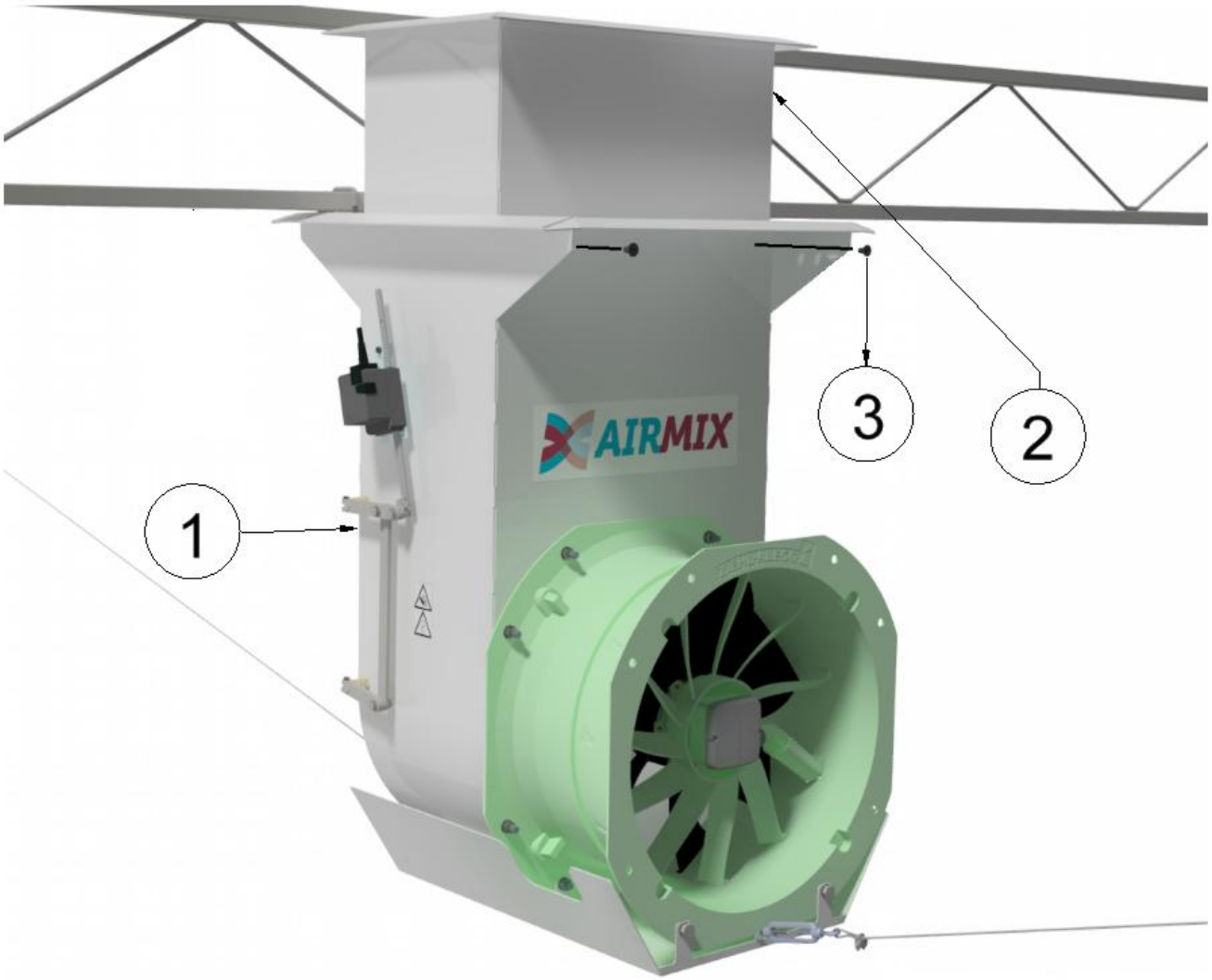

Figure 8 Installing the extension

Van der Ende Group · Aartsdijkweg 23, 2676 LE Maasdijk, The Netherlands
+31 174 51 50 50 · info@vanderendegroup.com · www.vanderendegroup.com

4.5 Installing the spacer

If the greenhouse has a double-screen, the Airmix system will require an extra part, namely a spacer. This must be placed between the two screen cloths so that the Airmix extracts air from above the upper screen, otherwise the machine would suck in air from between the two screens. The lower screen cloth must still be able to move between the Airmix housing and the spacer, so that it can be opened and closed. To ensure that no air is sucked in between the Airmix and the spacer, brush strips and PVC flaps must be mounted on the spacer. Mount the spacer as follows:

- Use proper tools and equipment;
- Make sure that the extension can be installed safely - get help if necessary;
- What you will need:
    - 2x M8 U-clamps U50x50 or U60x55;
    - 4x M8 body work ring ;
    - 4x M8 lock nuts;
    - 2x clamping strips (3);
    - 1x cuff (2);
    - 10x self-tapping screws (4);
    - 2x 3mm padding strips aluminum (6)
    - 2x stainless steel shaft L=540 mm (ø 4mm) (5)
- Assembly (see Figure 9 and Figure 10);
    - Ensure the Airmix is attached to the correct side of the truss lattice. The Airmix must be attached to the side of the truss lattice towards which the screen cloth profile moves when closing;
    - Make sure that the Airmix is mounted underneath two screen support wires. This is ensure that the aluminum screen profile runs over the housing;
    - Slide the cuff (2) over the spacer (1) and place the spacer next to the upper bar of the truss lattice aligned with the opening atop of the aluminum Airmix housing;
    - Attach the spacer to the upper truss lattice with two clamps, four M8 body work rings, four M8 lock nuts and two aluminum padding strips (6) (as shown in Figure 10);
    - Use the padding strip (6) between the truss lattice bar and the Airmix housing to create an opening of 3mm for the screen support wires;
    - Slide the cuff down to cover the gap between the Airmix and the spacer;
    - Attach the cuff to the spacer using two clamping strips (3) and self-locking screws (4)
    - Slide two pieces of stainless steel shaft (ø 4mm) (5) into the cuff (2) for increased strength and stability;
    - Check that the aluminum profiles of the screen cloth passes under the spacer.
    - Place 2 extra support wires next to the Airmix, these wires support the screen cloth.
    - Remove the two guiding clips from the screen cloth profile at the Airmix. These clips will not be able to slide over the Airmix and could potentially cause damage to the cuff.

Van der Ende Group · Aartsdijkweg 23, 2676 LE Maasdijk, The Netherlands
+31 174 51 50 50 · info@vanderendegroup.com · www.vanderendegroup.com

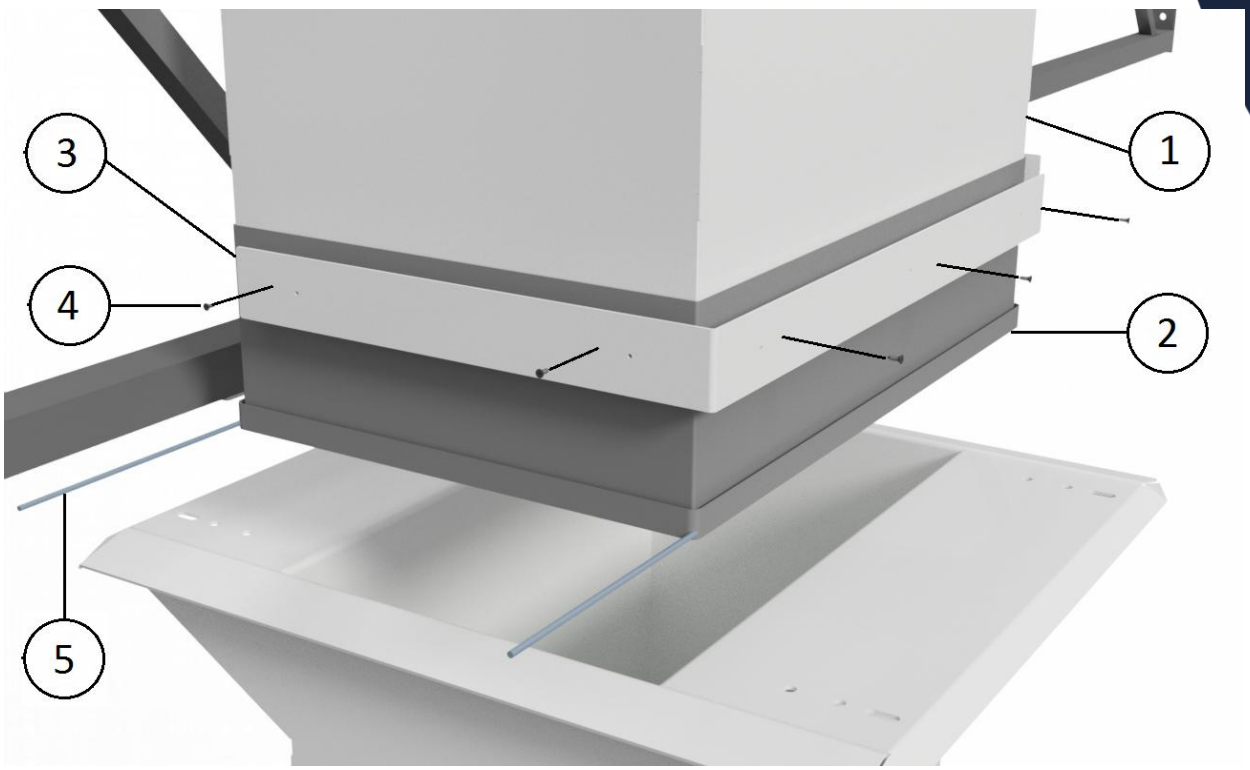

Figure 9 Attaching the spacer

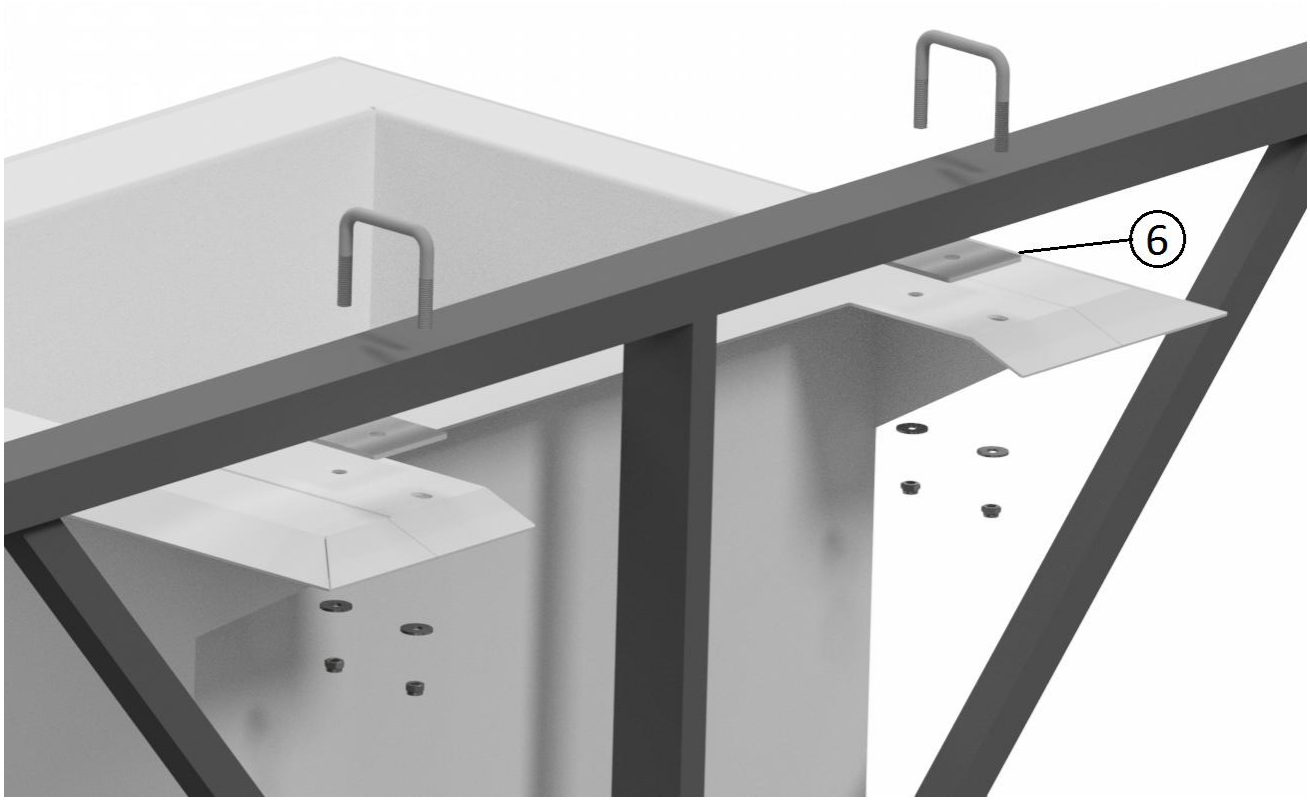

Figure 10 Attaching the spacer

Van der Ende Group · Aartsdijkweg 23, 2676 LE Maasdijk, The Netherlands
+31 174 51 50 50 · info@vanderendegroup.com · www.vanderendegroup.com

4.6 Installing the valve position sensor

The valves of the Airmix must be controlled by a climate computer, see chapter 6.1. One valve position sensor must be installed per greenhouse section on an Airmix to report the actual position of the valves to the climate computer. In practice, a greenhouse might be divided into multiple sections, where each section has its own climate control. That is why one Airmix in each section has to be equipped with a valve position sensor. The valve position sensor must be mounted before the Airmix is suspended. Mount the valve position sensor as follows:

- Use proper tools and equipment;
- Make sure that the valve position sensor can be installed safely - get help if necessary;
- Mounting the valve position sensor with vertical/open valves, the valves can be manually opened if the valve actuator (gear rack) is unlocked (see chapter 6.1 “Valve actuator” Figure 28).
- Drill two 6-mm holes in the Airmix housing , see Figure 11;
- Assemble the parts as shown in the Figure 11-13 below;
- The lever must be mounted in the top free hole of the linear rack; See Figure 12. The hole at the end of the rack is, according to standard production, being used by a blocking nut to stop the rack from entering the drive.

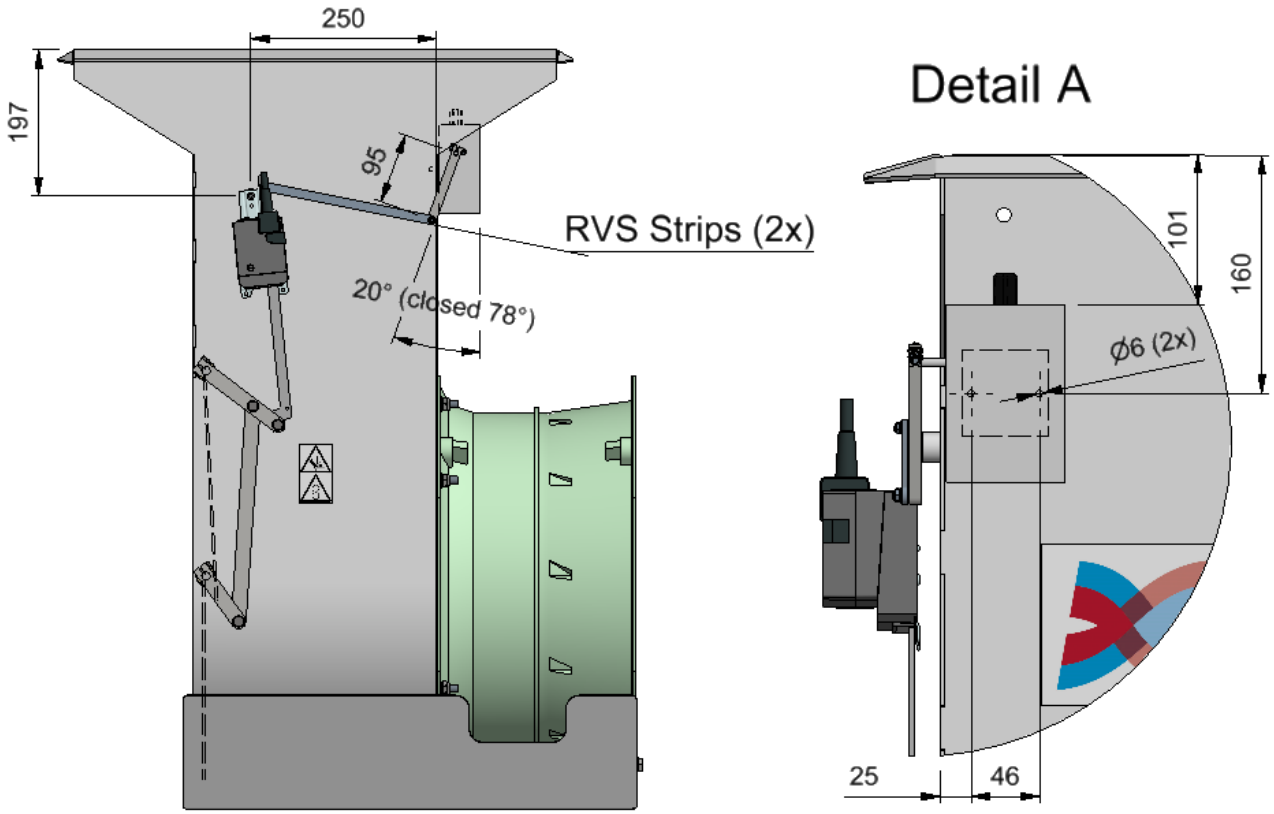

Figure 11 Mounting valve position sensor

Van der Ende Group · Aartsdijkweg 23, 2676 LE Maasdijk, The Netherlands
+31 174 51 50 50 · info@vanderendegroup.com · www.vanderendegroup.com

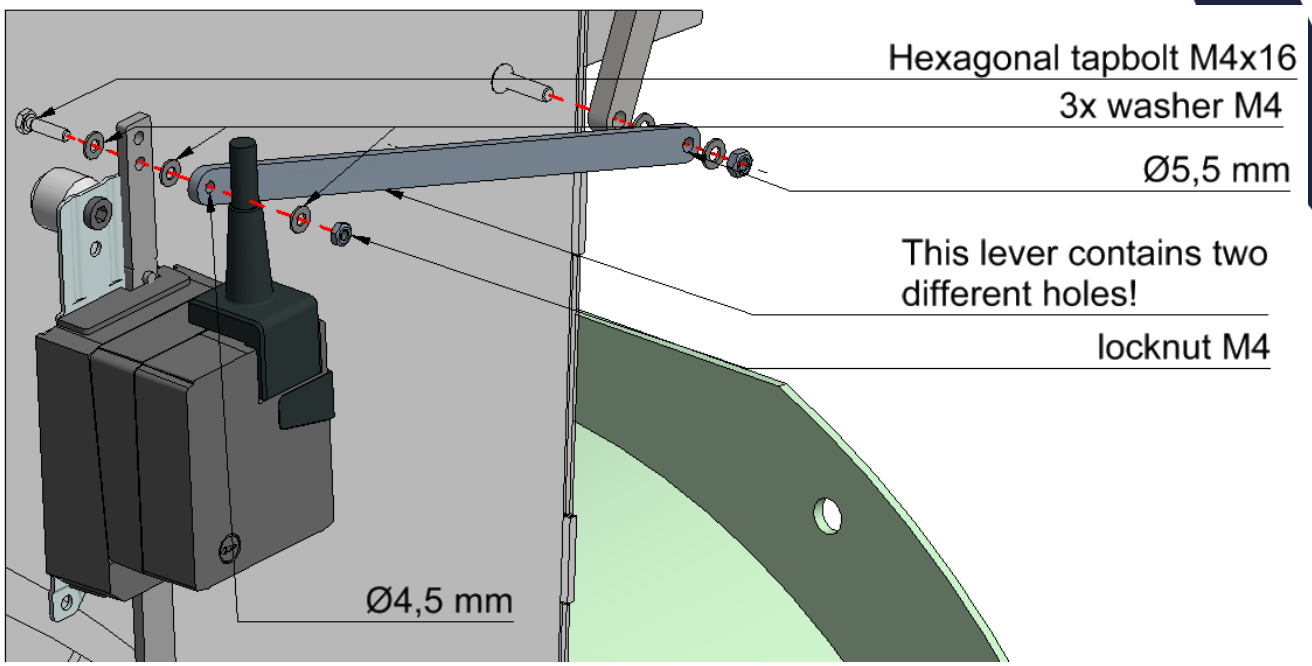

Figure 12 Mounting the Valve positioner (Gear rack drive)

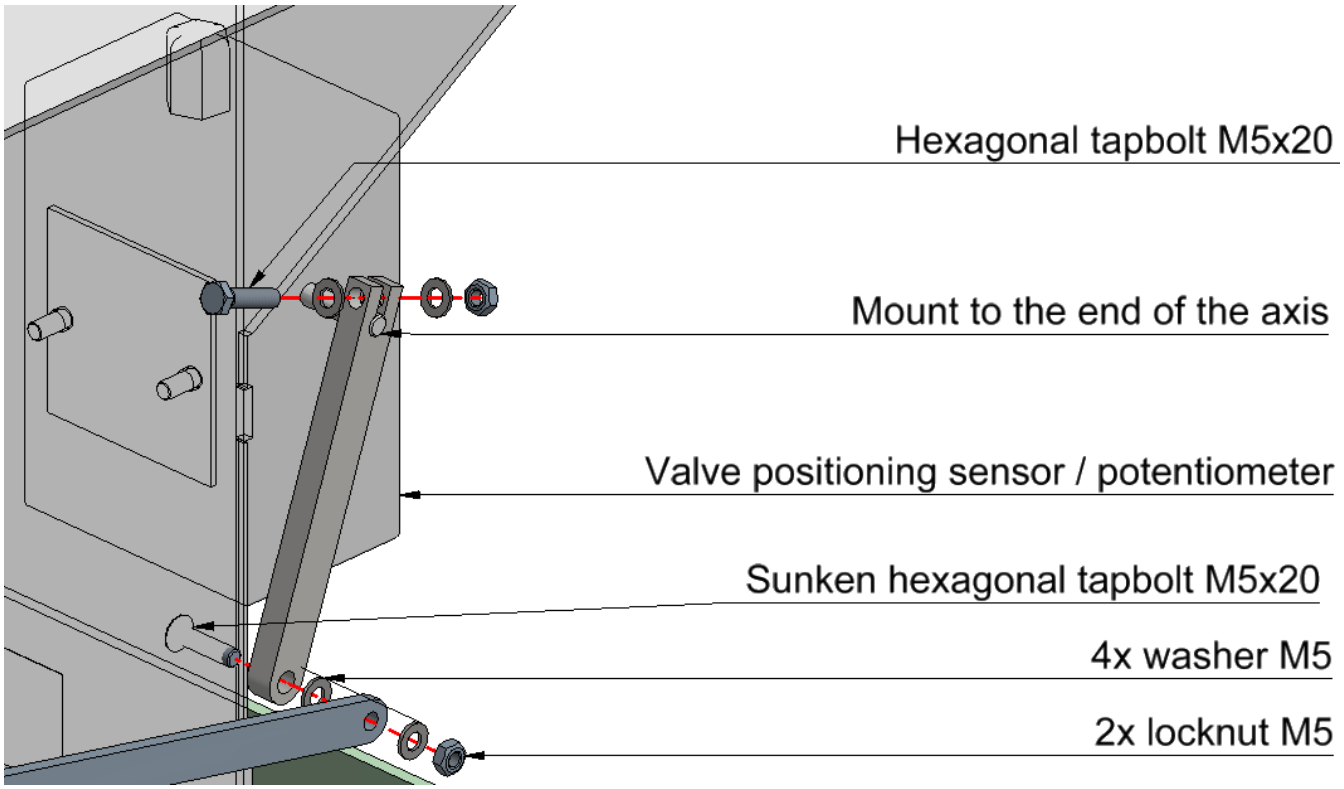

Figure 13 Mounting the valve position sensor

Van der Ende Group · Aartsdijkweg 23, 2676 LE Maasdijk, The Netherlands
+31 174 51 50 50 · info@vanderendegroup.com · www.vanderendegroup.com

4.7 Air flow guide plates

Air flow guide plates direct the air that is blown from the ventilator. Various configurations are possible to control the air flow. The configurations presented in chapter 4.7.1 are tested by VDEG on their desired effect. However, due to differences in installations, it is recommended to perform a single test prior to implementation, in order to obtain the most desirable effect.

4.7.1 Configuration of the air flow guide plates

The number of guide plates attached to the Airmix and their orientation are vital for determining the air flow. The configurations with one guide plate are shown in Figure 14. The left configuration restricts the airflow downwards whilst the right restricts the flow upwards. A downwards restriction might be necessary if the airflow affects the crop too much. An upwards air flow restriction is imposed when the flow affects the screen cloth too much.

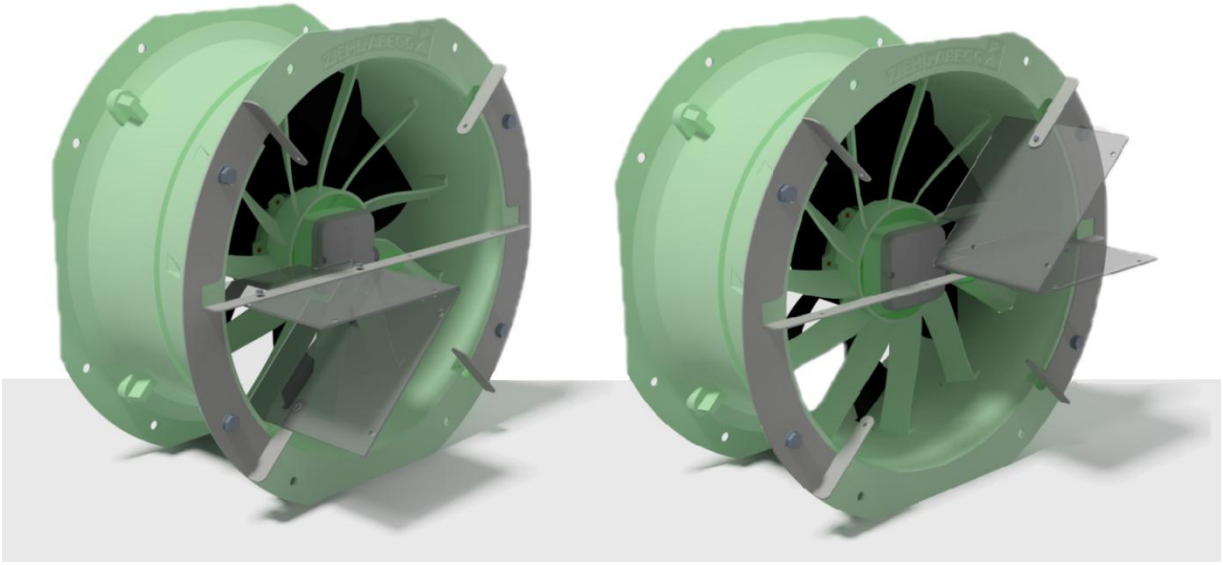

Figure 14 Downward (left) and upward (right) air flow restriction

If the configurations in Figure 14 do not influence the air flow enough, one can choose to use two air flow guide plates to restrict the flow. Figure 15 shows these configurations. The left configuration is used to limit the downward air flow even more. Respectively, the right configuration limits the upward flow even more than the one in Figure 14 does.

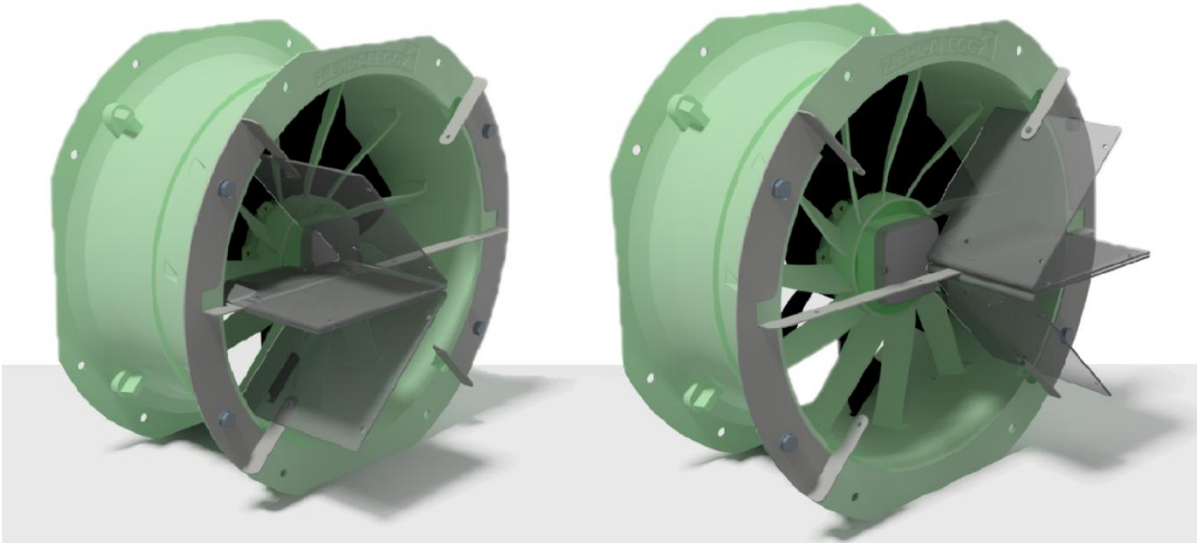

Figure 15 Extra downward (left) and upward (right) air flow restriction

Van der Ende Group · Aartsdijkweg 23, 2676 LE Maasdijk, The Netherlands
+31 174 51 50 50 · info@vanderendegroup.com · www.vanderendegroup.com

4.7.2 Assembling the air flow guide plates

To attach the guide plates to the Airmix, the mounting bracket must first be attached to the fan. One can also choose to attach the guide plates to the mounting bracket before connecting the bracket to the Airmix.

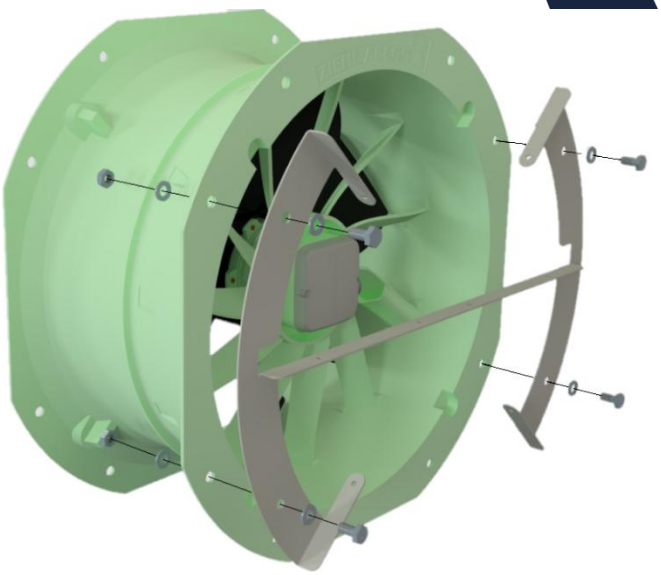

Requirements:

- 1x mounting bracket
- 4x hexagonal tap bolt m10 x 25
- 8 x washer m10
- 4x lock nut m10

Figure 16 Installing the mounting bracket

The mounting bracket will be connected to the fan according to Figure 16. Depending on the configuration, the bolts passing through horizontal strip of the mounting bracket will fixate either one or two air flow guide plates.

Requirements:

- 1x Air flow guide plate
- 3x hexagonal tap bolt m5 x 16
- 6x washer m5
- 3x lock nut m5

When one air flow guide plate is connected to the mounting bracket, Figure 17 shows how it needs to be assembled.

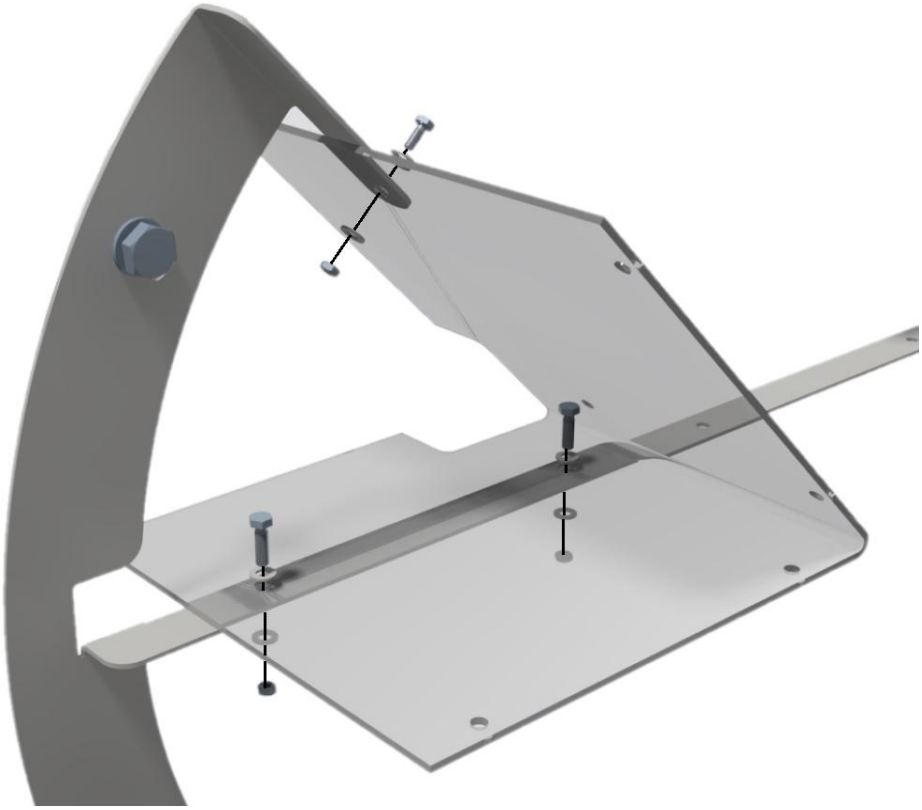

Figure 17 Connecting one air flow guide plate to mounting bracket

Van der Ende Group · Aartsdijkweg 23, 2676 LE Maasdijk, The Netherlands
+31 174 51 50 50 · info@vanderendegroup.com · www.vanderendegroup.com

If two guide plates are used to restrict the air flow, Figure 18 shows how they are connected to the mounting bracket.

Requirements:

- 2x Air flow guide plate
- 4x hexagonal tap bolt m5 x 16
- 8x washer m5
- 4x lock nut m5

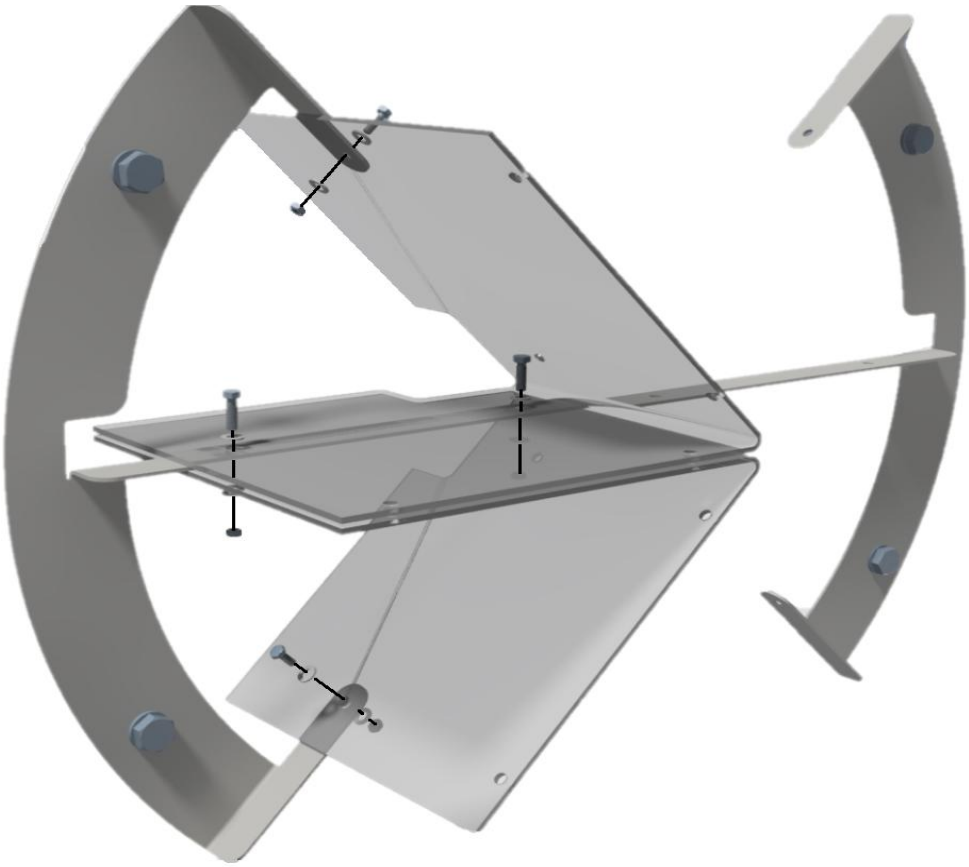

Figure 18: Connecting two air flow guide plate to mounting bracket

The Airmix comes with an outlet grill which can be mounted in front of the fan outlet by means of four torx screws.

Whenever air flow guides plates are used in combination with the outlet grill, the plates need to mounted in reversed position. The guide plates should be attached to the outlet grill with Ty-raps.

Van der Ende Group · Aartsdijkweg 23, 2676 LE Maasdijk, The Netherlands
+31 174 51 50 50 · info@vanderendegroup.com · www.vanderendegroup.com

4.8 Modifying the screen cloth

The Airmix system requires modifications to the screen cloth. A rectangular hole must be made in it so that the Airmix can draw in air from above the screen. This hole must be made at least as large as the opening on top of the Airmix housing (323 x 530 mm), and needs to be reinforced. If the Airmix is used in combination with a spacer, the hole in the screen cloth needs to have a minimum size of 366 x 556 mm.

Multiple methods can be used for strengthening the hole in the screen cloth. The screen cloth installer is free to choose their preferred method. One condition for adding the hole in the screen is that with a new screen the screen has to rest for 2 months before the holes are made.

Figure 19 illustrates how the screen cloth can be strengthened. In this example a stainless steel axis is stitched at the long side of the hole using special tape. An instruction video demonstrating this method is available upon request.

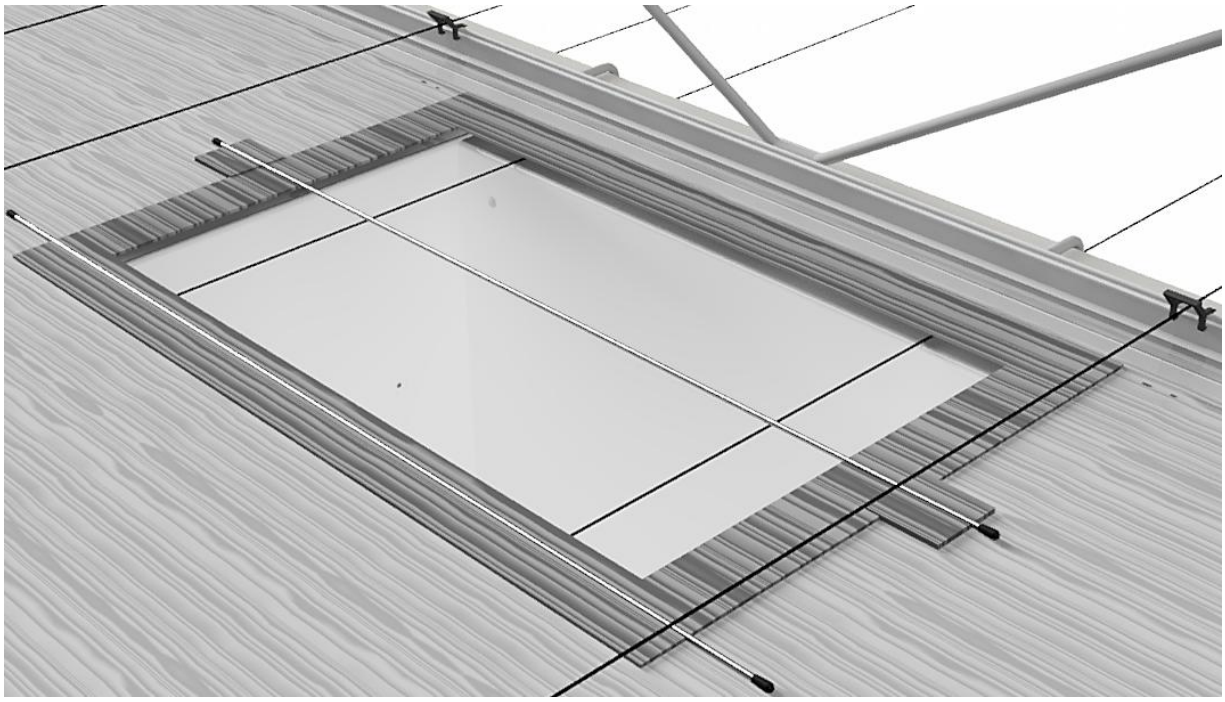

Figure 19 Modification to the screen cloth required for operating the Airmix

4.8.1 prescribed modification to the screen cloth

The Airmix is supplied by VDEG with two standard stainless steel axes (L= 75 cm) and four plastic caps. These caps should be placed at the end of each axis, hereby protecting the screen cloth from tears. The axes should be used to strengthen the hole in the screen cloth. Place the axes parallel to the aluminum screen cloth profile. One axis should be placed in the center of the hole, and the other at the edge of the opening. The axes prevent the screen cloth from sagging and ensure that the hole in the aluminum housing of the Airmix always aligns with the one in the screen cloth. The two extra support wires next to the Airmix function as support for the axes stitched to the screen cloth.

Should the screen installer not have the special screen cloth tape, which is used to strengthen the hole, at their disposal, then VDEG is able to supply it upon request. For more advice regarding the modification to the screen cloth, we kindly refer you to VDEG's technical support team or your screen cloth installer.

4.8.2 Protecting the screen support wires

The Airmix is supplied with a nylon hose. This hose needs to be clicked into the bottom cavity of the aluminum screen profile at the location where the Airmix housing and the extension are suspended. The hose replaces the screen support wire guides, which need to be removed in order for the screen to open/close without damaging the support wires or the Airmix.

Van der Ende Group · Aartsdijkweg 23, 2676 LE Maasdijk, The Netherlands
+31 174 51 50 50 · info@vanderendegroup.com · www.vanderendegroup.com

The hose is delivered as part of a roll, and needs to be cut into pieces of 80 cm by the installer. The hose is black, has an outer diameter of 10 mm and an inner diameter of 8 mm. Figure 20 shows the location where the hose needs to be placed.



Figure 20 Nylon hose for protecting the support wires

Van der Ende Group · Aartsdijkweg 23, 2676 LE Maasdijk, The Netherlands
+31 174 51 50 50 · info@vanderendegroup.com · www.vanderendegroup.com

5 CONNECTING THE THERMOSTATIC SWITCH

A thermostatic switch is built into the winding of every fan as standard. When connected, this switch turns the engine off if voltage levels are exceeded and the internal temperature rises above 100 °C. The motor gets too hot if the fan becomes locked, or similar.

Connecting the fan as shown in Figure 21 and 22 increases its life span. The thermostatic switch is connected in series with the phase. The red line in Figure 21 is the connection between TB and U1.

PLEASE NOTE: This thermostatic switch has no hard reset, so when the engine has cooled sufficiently it will restart. Therefore, always disconnect the plug from the power supply during maintenance!
NB: an external protective device with a hard reset is available on request.

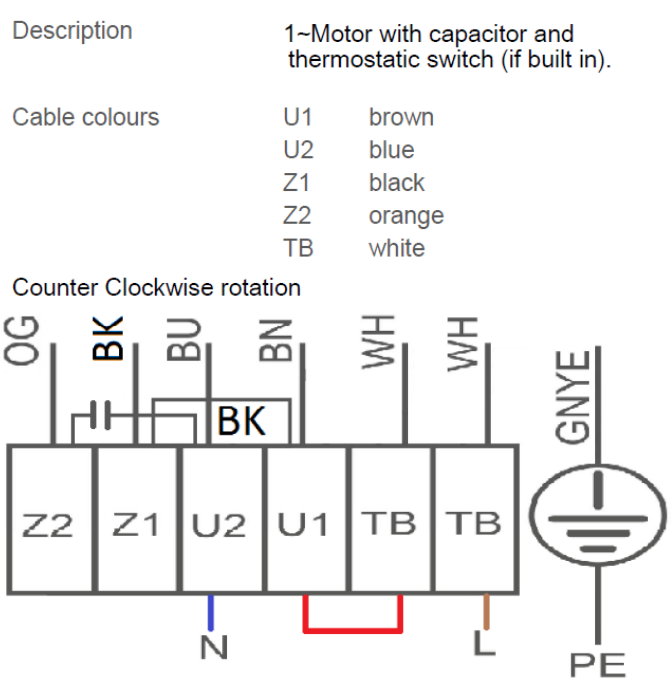

Figure 21 Wiring diagram AC Fan

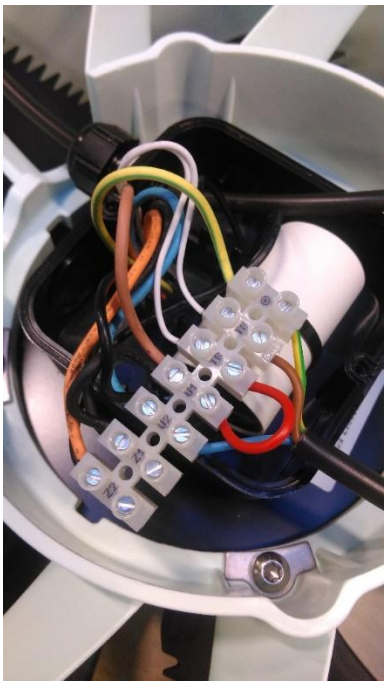

Figure 22 Connecting the thermostatic switch

Van der Ende Group · Aartsdijkweg 23, 2676 LE Maasdijk, The Netherlands
+31 174 51 50 50 · info@vanderendegroup.com · www.vanderendegroup.com

6 OPERATION/USING FOR THE FIRST TIME

Operating the fan of the Airmix is simple: if it is connected to the power supply it will start ventilating, if it is disconnected it will stop ventilating. It is possible to set the speed by adjusting the voltage at the plug with a control transformer, but this is however, lies outside the scope of the Airmix manual.

6.1 Connection diagram fan

6.1.1 Connection diagram ZN045 AC fan 230 V ~1 50 Hz

If the ZN045 AC 230 V ~1 fan has a connection frequency of 60 Hz, it is connected identically to the fan operating at 50 Hz. **Note: In this scheme, the thermostatic switch is not connected yet (see Figure 21 and Figure 22)!**

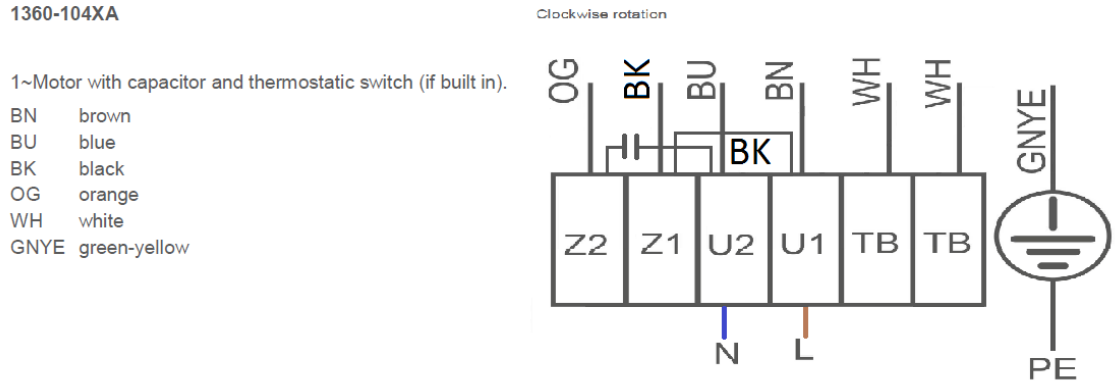

Figure 23 Connecting diagram ZN045 AC ~1

6.1.2 Connection diagram ZN045 AC fan 230/400V D/Y ~3 50 Hz

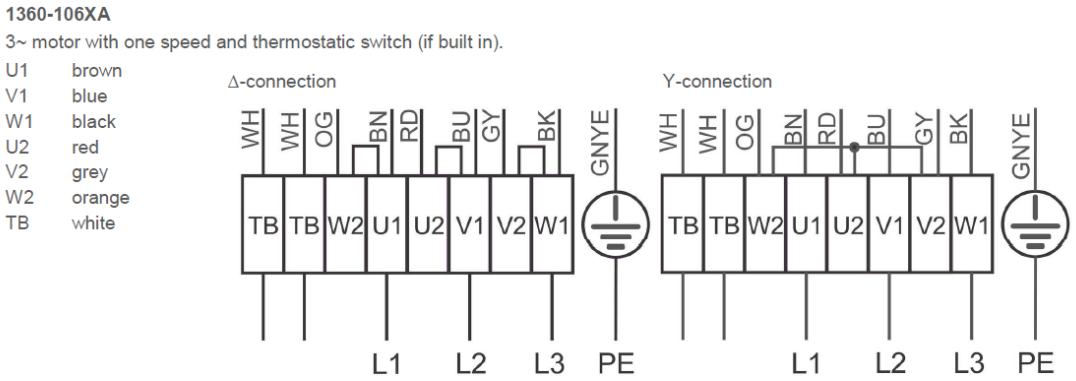

Figure 24 Connecting diagram ZN045 AC ~3; Left wiring 230V / Right wiring 400V

Van der Ende Group · Aartsdijkweg 23, 2676 LE Maasdijk, The Netherlands
+31 174 51 50 50 · info@vanderendegroup.com · www.vanderendegroup.com

6.1.3 Connection diagram ZN045 EC-fan 200-277 V AC ~1 50/60 Hz

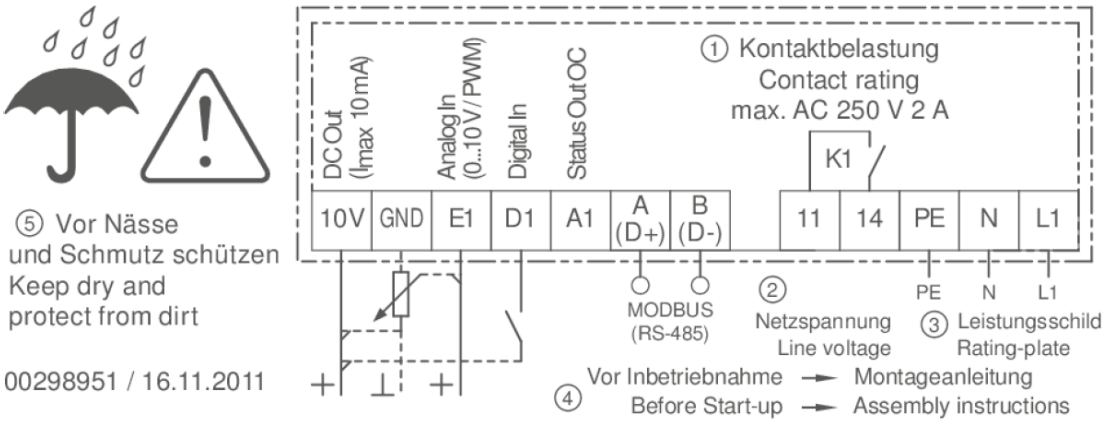

Figure 25 Connecting diagram ZN045-6IL

The power cable for the ZN045 is an 1-phase cable. This power cable must be connected to the following terminals inside the terminal box of the fan (see Figure 25):

- Live-wire (brown) to 'L1'
- Neutral-wire (blue) to 'N'
- Earth wire (green/yellow) to 'PE'

The main voltage where the EC-Fan is connected to must be corresponding to the voltage which is given on the type plate/sticker on the side of the fan. This main voltage must meet with the quality characteristics of EN50160 and the defined voltages of IEC60038.

The digital input (D1) is the external start on which the fan is turning on and off. When the terminals 'D1' and 'DC Out' are connected, the fan is enabled to switch on and off. The fan will operate following the preferred speed. The applied wire diameter is dependent on the length of the wire.

It is possible to regulate the RPM of the ZN045 by an external signal. The advice is to use a shielded cable for this external signal. There are multiple options to apply as an external signal:

- 0…10V + on E1, – on GND
- 0…100% PWM + on E1, – on GND
- Potentiometer + on 10V, – on GND and the signal on E1

The ZN045 EC-Fan is equipped with the possibility of MODBUS communication with a RS-485 interface. To use the MODBUS communication, terminals 'A (D+)' and 'B (D-)' must be connected. In the case of attaching multiple fans to each other with MODBUS, this must be done in a serial circuit like it's done in the following figure.

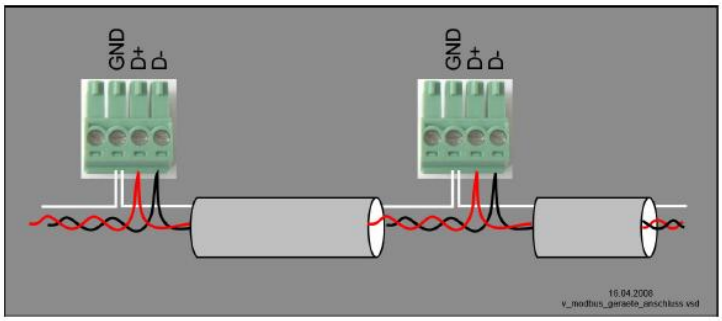

The recommended cables for using MODBUS communication;

- CAT5 / CAT7 wires
- J-Y (ST) Y 2x2x0,6
- AWG22 (2x2 twisted pair)

Van der Ende Group · Aartsdijkweg 23, 2676 LE Maasdijk, The Netherlands
+31 174 51 50 50 · info@vanderendegroup.com · www.vanderendegroup.com

6.1.4 Connection diagram ZG045 EC-fan 200-240 V AC ~1 50/60 Hz

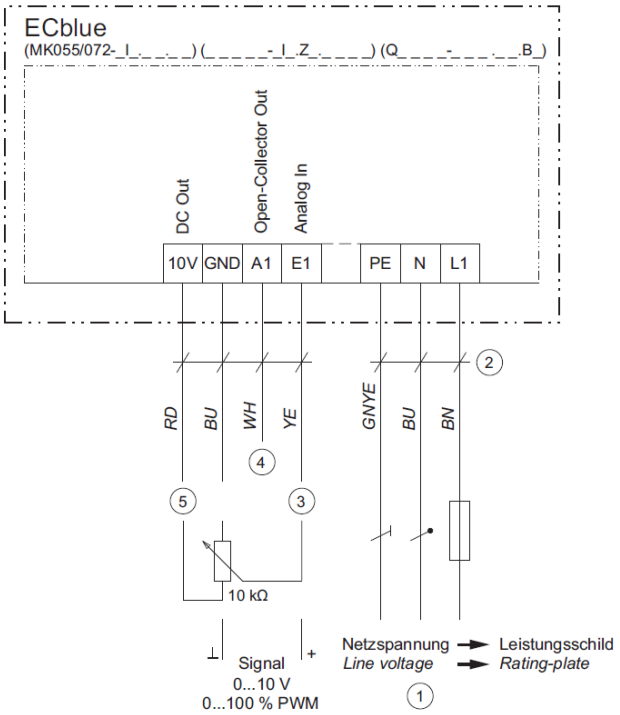

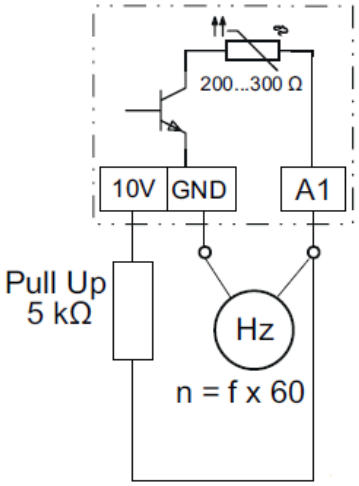

Figure 26 (left) Connecting diagram ZG045-ZIL
Figure 27 (right) Connecting feedback signal

The power cable for the ZG045 is an 1-phase cable. This power cable must be connected to the following terminals inside the terminal box of the fan (see Figure 26):

- Live-wire (brown) to 'L1'
- Neutral-wire (blue) to 'N'
- Earth wire (green/yellow) to 'PE'

The main voltage where the EC-Fan is connected to must be corresponding to the voltage which is given on the type plate/sticker on the side of the fan. This main voltage must meet with the quality characteristics of EN50160 and the defined voltages of IEC60038.

It is possible to regulate the RPM of the ZN045 by an external signal. The advice is to use a shielded cable for this external signal. There are multiple options to apply as an external signal:

- 0…10V + on E1, – on GND
- 0…100% PWM + on E1, – on GND
- Potentiometer + on 10V, – on GND and the signal on E1

When a signal cable (4x 0.34 mm^2 LIY-CY shielded cable) is optionally purchased for a 0... 10V control, the following connections must be maintained:

Fan terminal block (see Figure 26)	Signal cable	Connection
Red (RD)	Brown	Not used
Blue (BU)	Green	- Connection 0... 10V
White (WH)	White	Not used
Yellow (YE)	Yellow	+ connection 0... 10V

The ZG045 has no external start. The EC-Fan will start as soon as the above described wiring is properly connected and the external signal is sufficient enough to run the fan.

The ZG045 has no possibility to use Modbus communication.

To read out the current RPM of the fan for feedback is possible by the connecting diagram of Figure 27. Place a 5kΩ resistor between the terminals '10V DC OUT' and 'A1 open-collector out'. The

Van der Ende Group · Aartsdijkweg 23, 2676 LE Maasdijk, The Netherlands
+31 174 51 50 50 · info@vanderendegroup.com · www.vanderendegroup.com

measured the frequency between A1-GND gives the revolutions per second. Multiply he measured frequency with 60 to get the revolutions per minute (RPM).

6.2 Valve actuator

The drive (Figure 28) of the valves must be controlled by the climate computer. A 3-core flexible cable exits the valve actuator. Core number 1 is neutral, and cores number 2 and 3 respectively open and close the linear gear-rack drive. 24 V AC 50/60 Hz. 24 V DC.

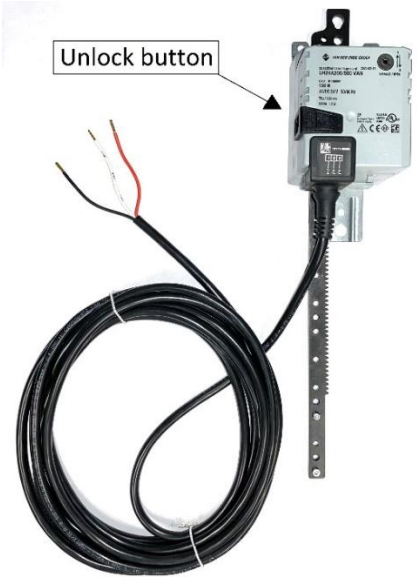

Figure 28 Valve Actuator

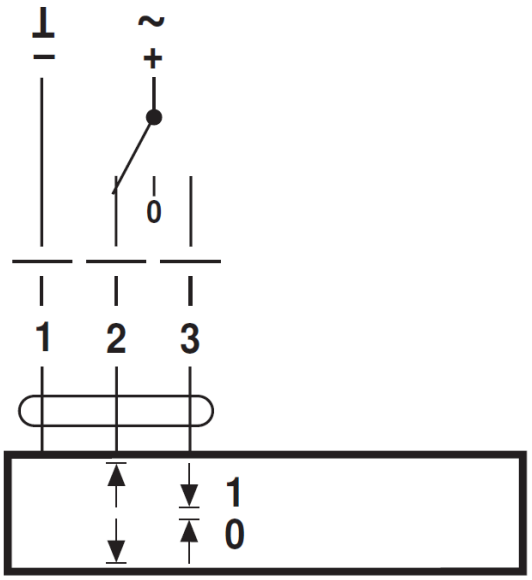

Figure 29 Valve actuator connection diagram

6.3 Connection diagram valve position sensor

The climate computer can readout the current position of the valves through connection 2 of the valve position sensor. The valve sensor axle (right in Figure 30), can be rotated 60 degrees by the valve actuator. This angle is converted into nearly a full rotation of a potentiometer (1 kΩ) through a gear transmission. Because the voltage over connection 2 is dependent on a variable resistance, the computer is able to determine by what angle the valve was originally rotated.



Figure 30 Valve position sensor

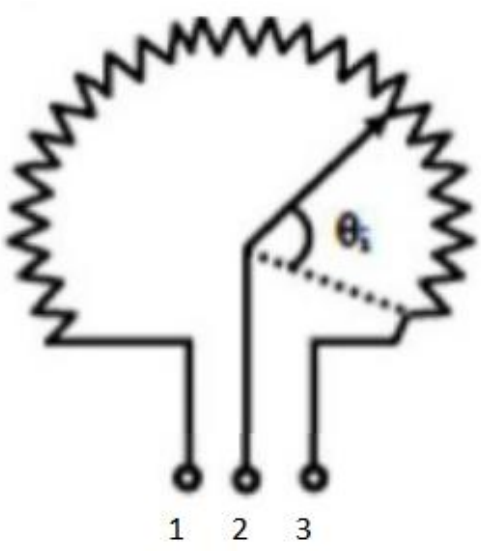

Figure 31 Schematic valve position sensor

Van der Ende Group · Aartsdijkweg 23, 2676 LE Maasdijk, The Netherlands
+31 174 51 50 50 · info@vanderendegroup.com · www.vanderendegroup.com

7 MAINTENANCE



Make sure that there **is no** voltage on the system and that it is protected against re-activation before carrying out any maintenance work!

The Airmix requires the following maintenance:

- Check that the fan can rotate freely. Do this by manually turning the fan according to the correct direction of rotation. For the direction of rotation, see the arrow on the fan blades.
- Keeps the suction and discharge side of the fan free of foreign objects and contaminants.
- If the fan blades and the fan housing are dirty, clean them with a damp cloth.
  - When cleaning, use clean water without any kind of harsh liquids or solvents
  - Do not point a high-pressure cleaner at the installation
- After cleaning, run the fan at 80-100% for at least 30 minutes to allow any moisture to evaporate from the engine.
- Keep the aluminum housing of the Airmix clean with a damp cloth.
- The ball bearings inside the fan will last 30,000 – 40,000 operating hours. After this time it may be necessary to replace it (or have it replaced). This depends on the observation while checking the fan on rotating freely. The advice is to replace the ball bearings preventively after 40,000 operating hours.

When the Airmix model T is used in an environment with high relative humidity, it is recommended to run the fan at 80–100% for at least 2 hours per month. This is recommended to allow any moisture which has penetrated into the engine to evaporate. This prevents the fans from not starting after a long period of downtime.

Check once every six months whether the nuts and bolts that secure the fan are still tight and tighten if necessary. When these have become slightly loose, it can happen that parts vibrate loose and fall down, which can cause dangerous situations.

8 FAILURES AND REPAIRS

Experience has shown that failures are virtually inexistent. What can happen in practice is that the thermal protection of the fan is triggered due to an internal defect, but if this does happen, it means that the fan has reached the end of its service life and must be replaced.
If the Airmix valves do not move to the desired position, it means the linear gear-rack drive is defective or a valve has jammed. Defective drives must be replaced. The valves can be manually opened or closed if the drive is unlocked (see unlock button in Figure 28). This allows the position where the valve is jammed to be determined and fixed.

9 DISASSEMBLY

Check that the plug is disconnected from the power supply and the linear drive is disconnected, to prevent unexpected and unwanted starting of the fan or the valves opening or closing. Make sure the workplace is safe, then remove the self-locking nuts of the U-clamps or the fan. Depending on what has to be disassembled, the Airmix and/or fan can now be removed.

Van der Ende Group · Aartsdijkweg 23, 2676 LE Maasdijk, The Netherlands
+31 174 51 50 50 · info@vanderendegroup.com · www.vanderendegroup.com

DECLARATION OF CONFORMITY

UKCA DECLARATION OF CONFORMITY

Van der Ende Pompen
Aartsdijkweg 23
2676 LE Maasdijk
The Netherlands

declare, under our sole responsibility, that the following machine

Airmix™

to which this declaration relates is in conformity with the following directives and their admendments;

Supply of Machinery (Safety) Regulations	2008:1597
Electrical Equipment (Safety) Regulations	2016:1101
Electro Magnetic Compatibility Regulations	2016:1091

It is also, where appropriate, in conformity with the following standards or other normative documents;

BS EN ISO 12100:2010	Safety of Machinery – Risk assessment and Risk reduction

The Netherlands
Maasdijk
10 November 2022

L. van der Ende



Van der Ende Group · Aartsdijkweg 23, 2676 LE Maasdijk, The Netherlands
+31 174 51 50 50 · info@vanderendegroup.com · www.vanderendegroup.com

EU DECLARATION OF CONFORMITY

(in accordance with Annex V Attachment IV part A of the Machinery regulation (EU) 2023/1230)

We,

Van der Ende Pompen
Aartsdijkweg 23
2676 LE Maasdijk
Netherlands

Hereby declare under our sole responsibility that the machine:

Airmix model T

To which this Declaration relates, is in conformity with the provisions of the following Directives:

Machinery Regulation (EU)	2023/1230
Low voltage directive	2014/35/EU
Electromagnetic compatibility directive	2014/30/EU

And (where applicable) is in conformity with the following standards or other normative documents:

EN ISO 12100, EN 60204-1, EN 61000-6-2, EN 61000-6-4

Netherlands
Maasdijk
20-05-2026

L. van der Ende



Van der Ende Group · Aartsdijkweg 23, 2676 LE Maasdijk, The Netherlands
+31 174 51 50 50 · info@vanderendegroup.com · www.vanderendegroup.com

ATTACHMENTS

- **CE declaration of conformity concerning fan**
- **CE declaration of conformity concerning valve actuator**
- **UKCA declaration of conformity concerning fan**
- **UKCA declaration of conformity concerning valve actuator**

Van der Ende Group · Aartsdijkweg 23, 2676 LE Maasdijk, The Netherlands
+31 174 51 50 50 · info@vanderendegroup.com · www.vanderendegroup.com

CE declaration concerning fan

EC-Declaration of conformity

0029311-GB

as defined by the EC Low Voltage Directive 2006/95/EC, the EMC guideline 2004/108/EC, as well as ErP guideline 2009/125/EG.

The type of machinery:

- External rotor motor MK.., MW..
- Axial fan FA.., FB.., FC.., FE.., FF.., FS.., FT.., FH.., FL.., FN.., VR.., VN.., ZC.., ZF.., ZN..
- Centrifugal fan RA.., RD.., RE.., RF.., RG.., RH.., RK.., RM.., RR.., RZ.., GR.., ER..

Motor type:

- Asynchronous internal or external rotor motor with integrated frequency inverter for EDP system
- Electronically commutated internal or external rotor motor with integrated EC controller for EDP system

is developed, designed and manufactured in accordance with the EC Directives 2006/95/EC, 2004/108/EC and 2009/125/EC, on the own responsibility of

ZIEHL-ABEGG SE
Heinz-Ziehl-Strasse
D-74653 Kuenzelsau

The following standards are applied:

EN 60034-1:2010+Cor.:2010, EN 60204-1:2006, EN 60529:1991 + A1:2000, EN 61000-6-4:2007, EN 61000-6-2:2005

Compliance with the ErP Directive 2009/125/EC does not refer to external rotor motors MK.., MW..

Compliance with the EMC Directive 2004/108/EEC only applies to this product if it is connected according to the operating instructions. If this product is integrated in a system or complemented and operated with other components (e.g., switching and control equipment), the manufacturer of or company operating the overall plant is responsible for compliance with the EMC Directive 2004/108/EEC.

The complete technical documentation is available.

22.11.2013

Dr. W. Angelis - Technical Director Air Movement Division

i.V. W. Angelis

ZA92-GB-12/13 Index 003

1

english

ZIEHL-ABEGG

Van der Ende Group · Aartsdijkweg 23, 2676 LE Maasdijk, The Netherlands
+31 174 51 50 50 · info@vanderendegroup.com · www.vanderendegroup.com

CE declaration concerning valve actuator

DECLARATION OF CONFORMITY

We BELIMO Automation AG
(manufacturer)

Brunnenbachstrasse 1
CH-8340 Hinwil
(adress)

declare under our sole responsibility that the product

LH24A200

to which this declaration relates is in conformity with
the following standard(s) or other normative
document(s).

EN/IEC 60730-1, EN/IEC 60730-2-14,
EN 50121-3-2:06 (railway),
EN 61000-6-2:05 (imm ind),
EN 61000-6-3:07 (em hh)

following the provisions of Directive

2006/95/EC, 2004/108/EC

Hinwil, 27.05.2008 Dieter Müller
(Place and date of issue) (name and signature)

Van der Ende Group · Aartsdijkweg 23, 2676 LE Maasdijk, The Netherlands
+31 174 51 50 50 · info@vanderendegroup.com · www.vanderendegroup.com

UKCA declaration concerning fan

UKCA Declaration of Incorporation

- Original -
(english)

ZA87_UK-GB
2022/17 Index 002

as defined by the Supply of Machinery (Safety) Regulations 2008 No. 1597, PART 2 / Annex II B

The design of the incomplete machine:

- Axial fan DN.., FA.., FB.., FC.., FE.., FF.., FG.., FH.., FL.., FN.., FP.., FS.., FT.., FV.., VN.., VR.., ZC.., ZF.., ZG.., ZN..
- Centrifugal fan ER.., GR.., HR.., RA.., RD.., RE.., RF.., RG.., RH.., RK.., RM.., RR.., RZ.., WR..
- Cross-flow fan QD.., QG.., QK.., QR.., QT..,

The motor type:

- Asynchronous internal or external rotor motor (also with integrated frequency inverter)
- Electronically commutated internal or external rotor motor (also with integrated EC controller)

complies with the requirements in Annex I, Articles 1.1.2, 1.1.5, 1.4.1, 1.5.1 in Supply of Machinery (Safety) Regulations 2008 No. 1597.

The manufacturer is **ZIEHL-ABEGG SE**
Heinz-Ziehl-Straße
D-74653 Künzelsau

The following harmonised standards have been used:

EN 60204-1:2018	Safety of machinery; electrical equipment of machines; Part 1: General requirements
EN ISO 12100:2010	Safety of machinery - General principles for design - Risk assessment and risk reduction
EN ISO 13857:2019	Safety of machinery; safety distances to prevent danger zones being reached by the upper limbs
Note:	The maintenance of the EN ISO 13857:2019 relates only to the installed accidental contact protection, provided that it is part of the scope of delivery.

The specific technical documentation in accordance with Annex VII B has been written and is available in its entirety.

The following persons are authorized to compile the technical documents, address see above.

The specific documentation will be transmitted to the official authorities on justified request. The transmission can be electronic, on data carriers or on paper. All industrial property rights remain with the above-mentioned manufacturer.

It is prohibited to commission this incomplete machine until it has been secured that the machine into which it was incorporated complies with the stipulations of the Machinery (Safety) Regulations.

Künzelsau, 27.04.2022
(location, date of issue)

ZIEHL-ABEGG SE
Tobias Gauss
Deputy Head of Technics Ventilation Technology
(name, function)

i.V.

(signature)

ZIEHL-ABEGG SE
Moritz Krämer
Head of Electrical Systems
(name, function)

i.V.

(signature)

ZIEHL-ABEGG

Van der Ende Group · Aartsdijkweg 23, 2676 LE Maasdijk, The Netherlands
+31 174 51 50 50 · info@vanderendegroup.com · www.vanderendegroup.com

UKCA declaration concerning valve actuator

UK DECLARATION OF CONFORMITY

BELIMO

Document ID	
1. Type	**LH24A200**
2. Manufacturer	**BELIMO Automation UK Ltd** Shepperton Business Park Govett Avenue Shepperton Middlesex TW17 8BA ENGLAND
3. Responsibility	declare under the sole responsibility that the product
4. Product	Electric Actuator
	to which this declaration relates is in conformity with the following regulations
5. Legislations	**UK S.I. 2016 No. 1091 (EMC)** / **UK S.I. 2016 No. 1101 (LVD)** / **UK S.I. 2012 No. 3032 (RoHS)**
6. Standards	and designated standard(s) EN 60730-1:11 EN 60730-2-14:97+A1:01+A11:05+A2:08 EN 61000-6-2:05 (imm ind) EN 61000-6-3:2:07+A1:11 (em hh)
7.1 Type examination	Not applicable
7.2 Certified module	Not applicable
8. Necessary accessories and components	Not applicable
9. Additional information	Designed according to EN 60730-2-14 for incorporation and/or integration in assembly with exclusion of the risk assessment for the electrical connections.
	BELIMO Automation UK Ltd
Signed for and on behalf of	Andy Bartlett Managing Director
Place and date of issue	Shepperton, 03 November 2022

Colors and details may differ from sample.

Page 1 of 1

Van der Ende Group · Aartsdijkweg 23, 2676 LE Maasdijk, The Netherlands
+31 174 51 50 50 · info@vanderendegroup.com · www.vanderendegroup.com

Van der Ende Group · Aartsdijkweg 23, 2676 LE Maasdijk, The Netherlands
+31 174 51 50 50 · info@vanderendegroup.com · www.vanderendegroup.com

Aartsdijkweg 23, 2676 LE Maasdijk, The Netherlands
+31 174 51 50 50 · info@vanderendegroup.com · www.vanderendegroup.com